For Your Convenience: This Westerbeke File Is Shared By Diesel Parts Direct

DIESEL PARTS DIRECT

YOUR ONE STOP SUPERSTORE FOR DIESEL ENGINE PARTS

SHOP NOW

UNIVERSAL ATOMIC DIESEL

MODEL 20

5416 (16 H.P.)

Universal MARINE POWER

QTY	PART NO.	DESCRIPTION
1	200140	PARTLIST M-20

SERVICE PARTS I3MH

PARTS MANUAL

medalist

Universal Motors

PRICE $10.00

FORM 12-83

PAGE NO.

CRANKCASE GROUP . . . . . 1 - 2

CYLINDER HEAD GROUP 3

GEAR CASE GROUP . . . . . 4 - 5

BEARING CASE GROUP 6

HEAD COVER GROUP . . . . . 7 - 8

BREATHER GROUP 9

CAMSHAFT GROUP . . . . . 10 -11

PISTON, CRANKSHAFT GROUP 12

VALVE, ROCKER ARM GROUP 13

FLYWHEEL GROUP 14

NOZZLE HOLDER GROUP 15

FUEL CAMSHAFT GROUP . . . . . 16 -17

SPEED CONTROL PLATE GROUP . . . . . 18 -19

GOVERNOR GROUP 20

NOZZLE HOLDER GROUP 21

INJECTION PUMP GROUP 22

STARTER GROUP . . . . . 23 -24

FUEL FILTER GROUP 25

OIL FILTER 2 GROUP 26

WATER PUMP GROUP - CIRCULATING 27

WATER PUMP - RAW WATER 27A

AIR CLEANER GROUP 28

ENGINE MOUNT GROUP 29

TRANSMISSION GROUP 30

COUPLINGS 30A

THROTTLE LINKAGE CONTROL GROUP 31

DYNAMO GROUP 32

EXHAUST MANIFOLD GROUP 33

HEAT EXCHANGER . . . . . 34 -35

INSTRUMENT PANEL 36

GASKET SET 36

SPARE PARTS KIT 36

WIRING DIAGRAM 37

WHEN ORDERING PARTS, SPECIFY MODEL AND SERIAL NUMBER OF ENGINE.

This information is absolutely essential for the correct execution of your order. We do not hold ourselves responsible for errors or delays where this is lacking.

SERIAL NUMBER LOCATIONS

Stamped on upper left hand corner of block - ignition side - facing flywheel end (front of engine).

Stamped in block directly above flywheel housing, under front oil filler.

On engine nameplate located on reverse gear housing cover.

On engine nameplate located on engine manifold.

RETURNED PARTS

Parts may be returned for credit subject to authorization by the factory, factory inspection and acceptance upon receipt, and a 15% Re-Stocking charge.

A return goods authorization number must be requested from the factory prior to returning the parts.

All return shipments must be fully PREPAID and clearly marked with shipper's name and address.

LOSS OR DAMAGE IN TRANSIT

Our responsibility ceases upon delivery of shipments to the common carrier. Any claims for loss or damage in transit must be filed with the transportation company.

SHORTAGE CLAIMS

All claims for shortage must be filed within ten (10) days after receipt of shipment and must be accompanied by packing list.

ALL ORDERS FOR REPAIR PARTS MUST BE PLACED THROUGH OUR DISTRIBUTOR/DEALER IN YOUR AREA.

MEDALIST - UNIVERSAL MOTORS
P.O. BOX 2508
OSHKOSH, WI 54903

(414)231-4100 Cable UNIMOT

ATTENTION - SERVICE DEPT.

CRANKCASE GROUP

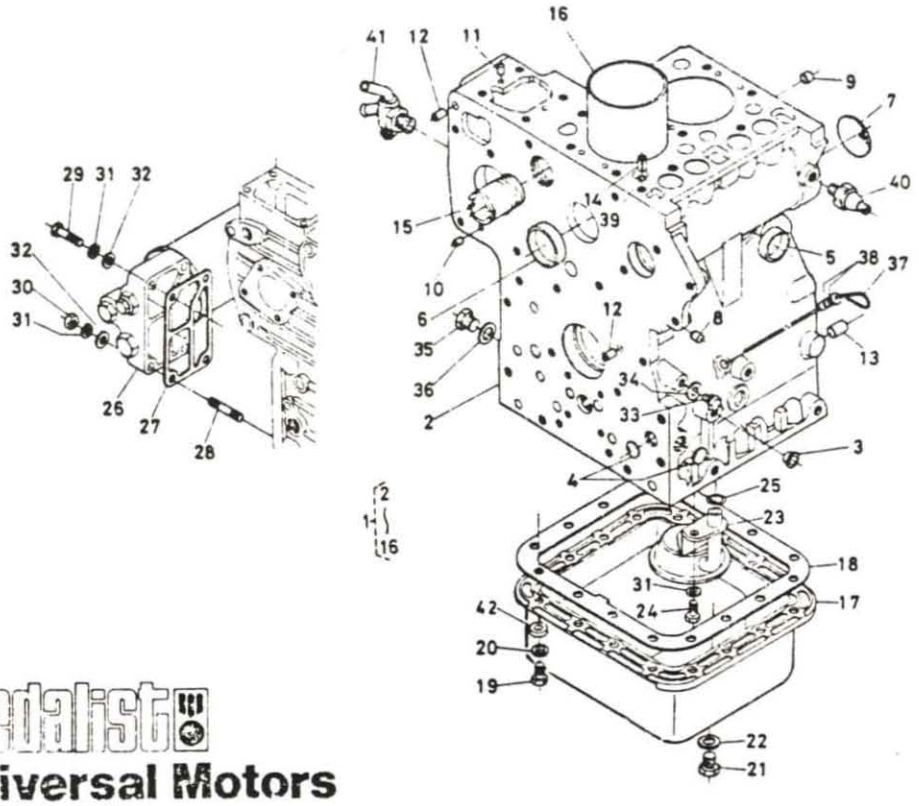

medalist
Universal Motors

ITEM	PART NO.	DESCRIPTION	UNIT
1	248650	Crankcase Assembly	1
2		Crankcase	1
3		Plug	6
4		Plug, Expansion	3
5		Cap, Sealing	3
6		Cap, Sealing	2
7		Plug, Expansion	1
8		Plug, Pin	4
9		Plug, Pin	1
10		Pin, Straight	2
11		Pin, Straight	2
12		Pin, Straight	2
13		Pin, Straight	1
14		Pin, Pipe	1
15		Pipe, Water	1
16	298856	Liner, Cylinder	2
17	298651	Oil Pan	1
18	298652	Oil Pan Gasket	1
19		Bolt	16
20		Washer, Spring	16
21	298653	Plug	1
22	298654	Gasket	1
23	248655	Oil Filter	1
24		Bolt	1

CRANKCASE GROUP (CONTINUED)

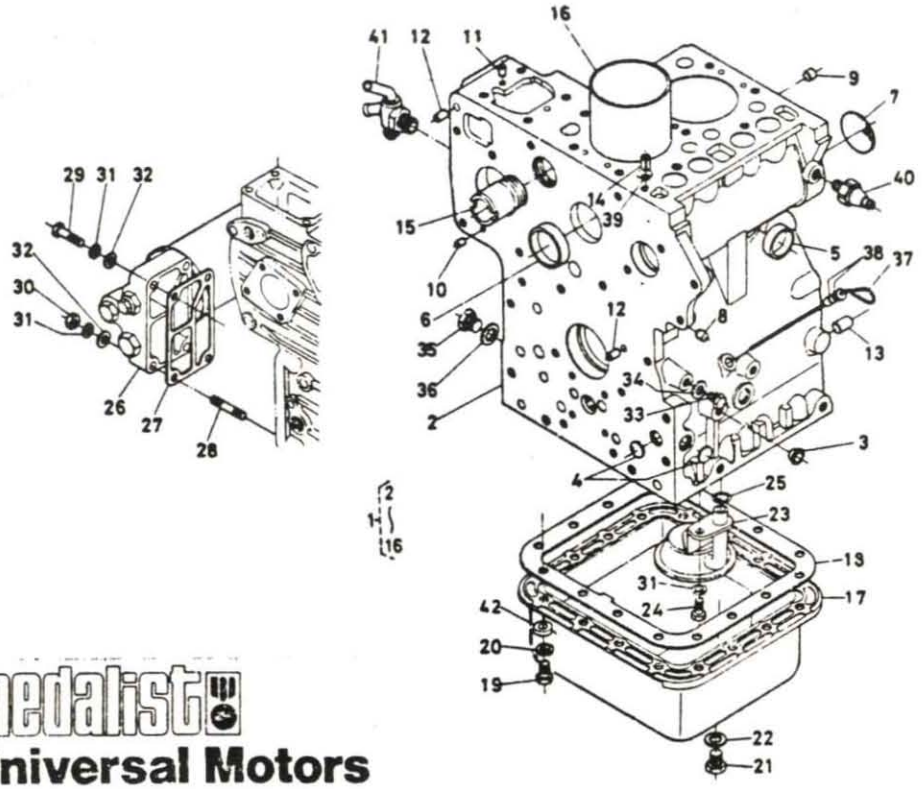

medalist
Universal Motors

ITEM	PART NO.	DESCRIPTION	UNIT
25	298657	O Ring	1
26	298656	Oil Filter Assembly	1
27		Gasket	1
28		Stud	1
29		Bolt	3
30		Nut	1
31		Washer, Spring	5
32		Washer, Plain	4
33	298658	Plug	1
34	298659	Gasket	1
35	298660	Plug	1
36		Gasket	1
37	298661	Dipstick	1
38	298662	O Ring	2
39	298665	O Ring	1
40	298663	Switch, Oil	1
41	298664	Cock, Drain	1
42		Washer, Plain	16

CYLINDER HEAD GROUP

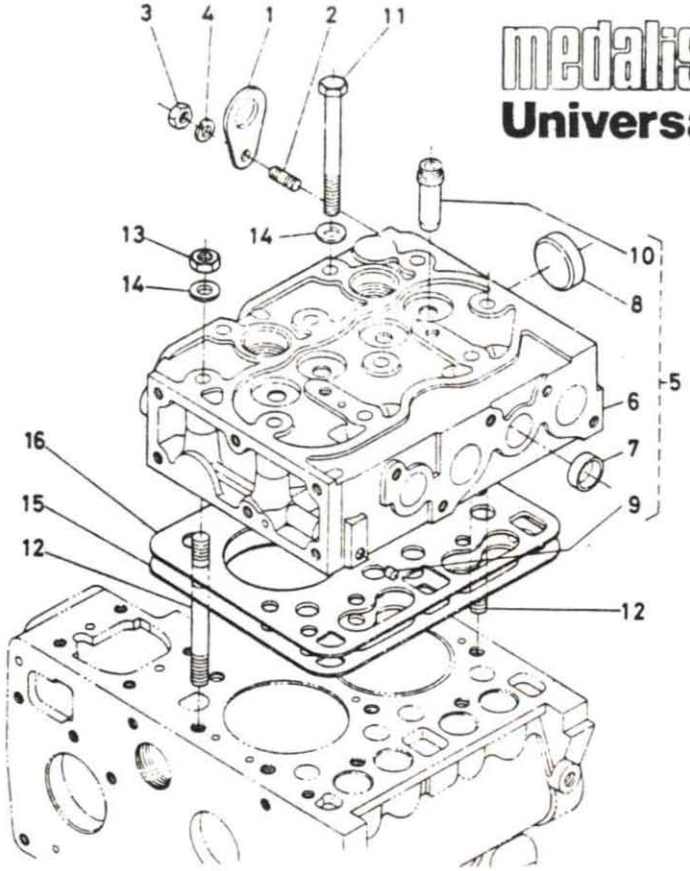

medalist Universal Motors

ITEM	PART NO.	DESCRIPTION	UNIT
1	298666	Hook, Engine	2
2		Stud	2
3		Nut	2
4		Washer, Spring	2
5	298667	Cylinder Head Assembly	1
6		Cylinder Head	1
7		Cap, Sealing	2
8		Cap, Sealing	1
9		Plug, Pin	2
10		Guide, Valve	4
11	298668	Bolt, Cylinder Head	8
12	298669	Stud, Cylinder Head	2
13	298670	Nut, Cylinder Head	2
14	298671	Washer, Plain	10
15	298672	Gasket, Cylinder Head	1
16	298673	Shim, Cylinder Head Gasket	1
17			
18			
19	256736	Complete Gasket Set	
20			
21			
22			
23			
24			

GEAR CASE GROUP

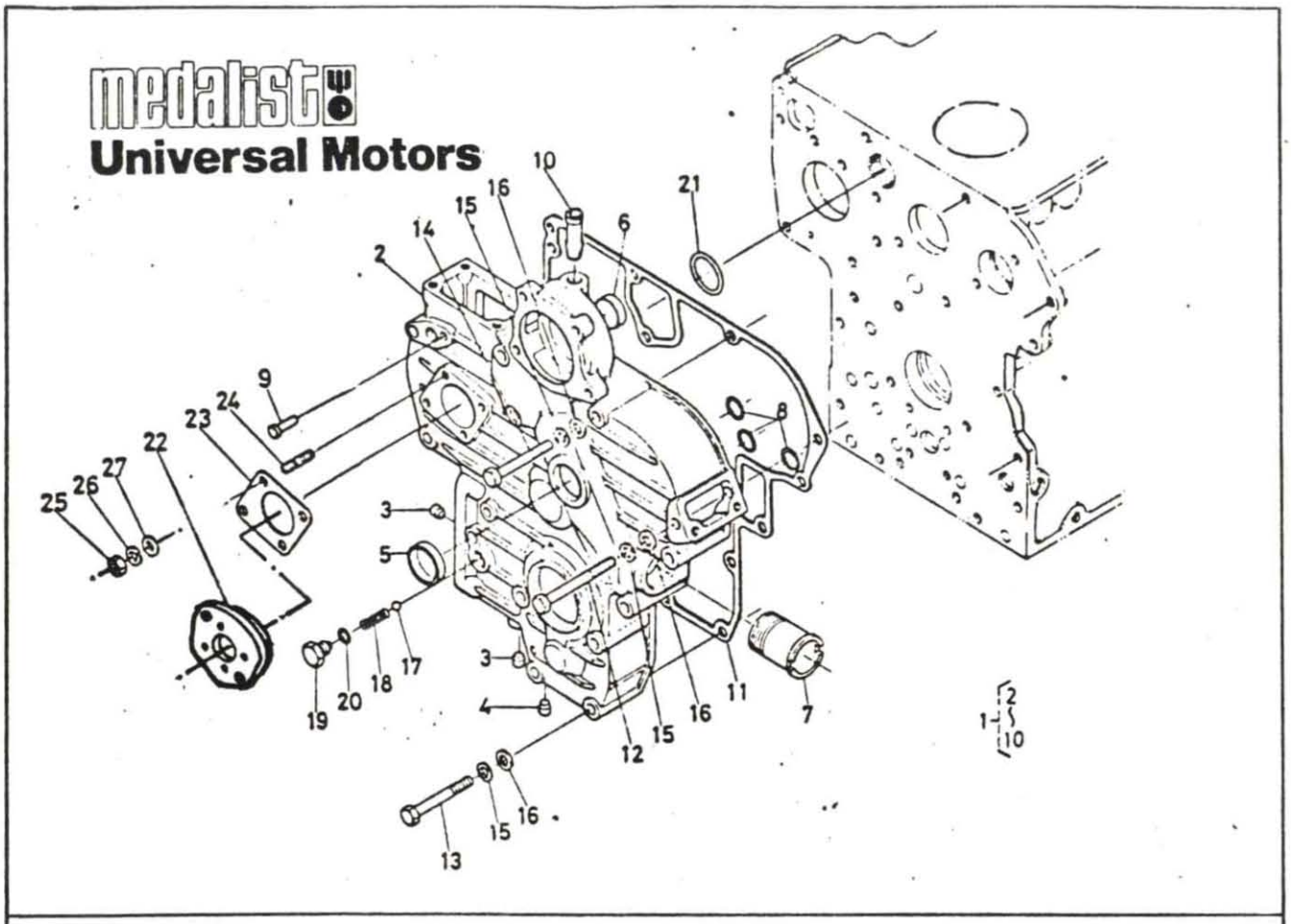

ITEM	PART NO.	DESCRIPTION	UNIT
1	298674	Gear Case Assembly	1
2		Gear Case	1
3		Plug, Pin	2
4		Plug, Pin	1
5		Cap, Sealing	1
6		Cap, Sealing	1
7		Pipe, Water	1
8		O Ring	3
9		Pin, Start Spring	1
10		Pipe, Water Return	1
11	298675	Packing, Gear Case	1
12		Bolt	1
13	298676	Bolt	10
14		Bolt	3
15		Washer, Spring	14
16		Washer, Plain	14
17	298677	Ball	1
18	298678	Spring	1
19	298679	Cap	1
20	298680	O Ring	1
21	298681	O Ring	1
22	298477	Adapter Plate	1
23	298485	Packing	1
24	298863	Stud	4

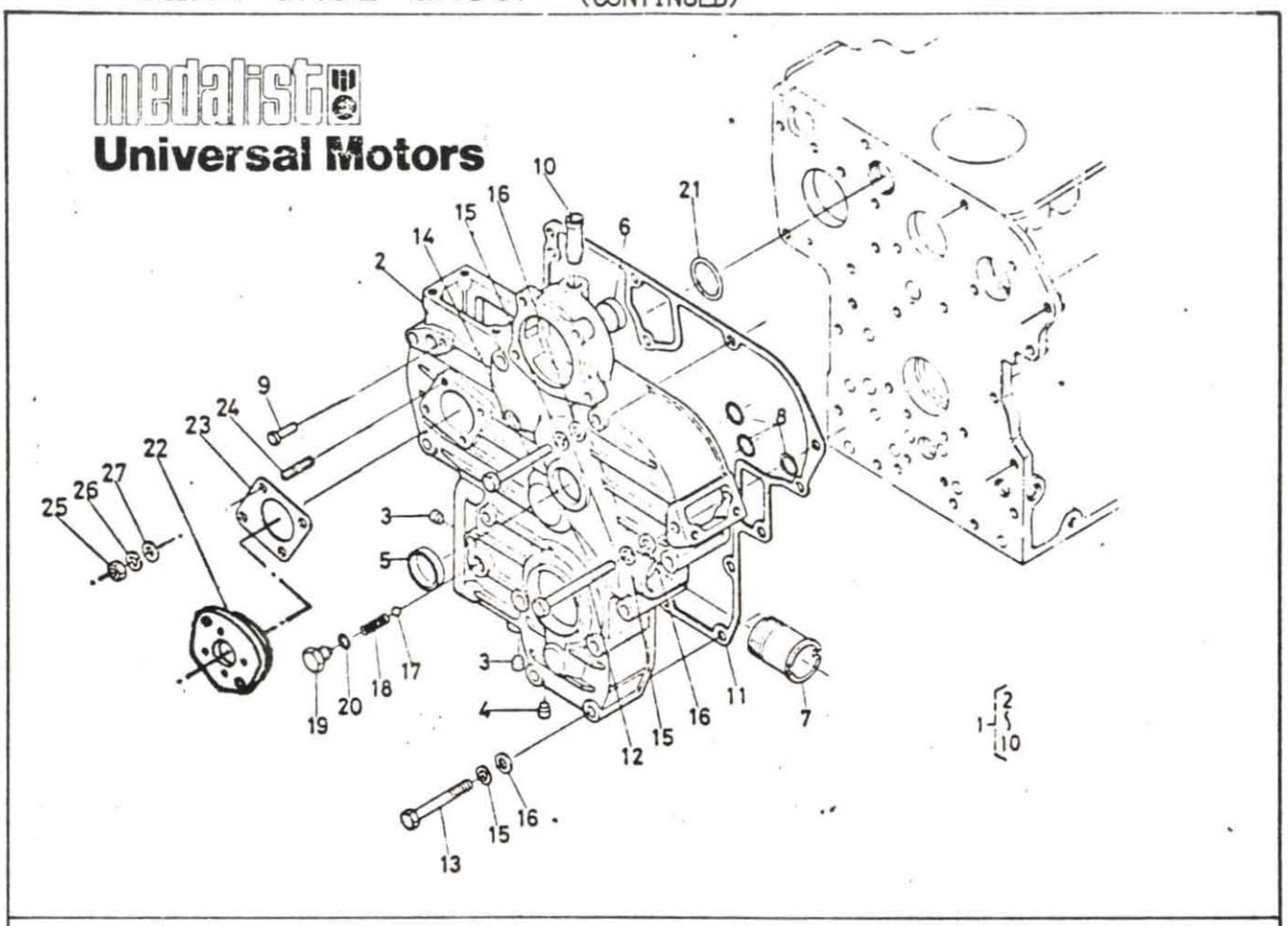

ITEM	PART NO.	DESCRIPTION	UNIT
25	298864	Nut	4
26		Washer, Spring	4
27		Washer, Plain	4
28			
29			

BEARING CASE GROUP

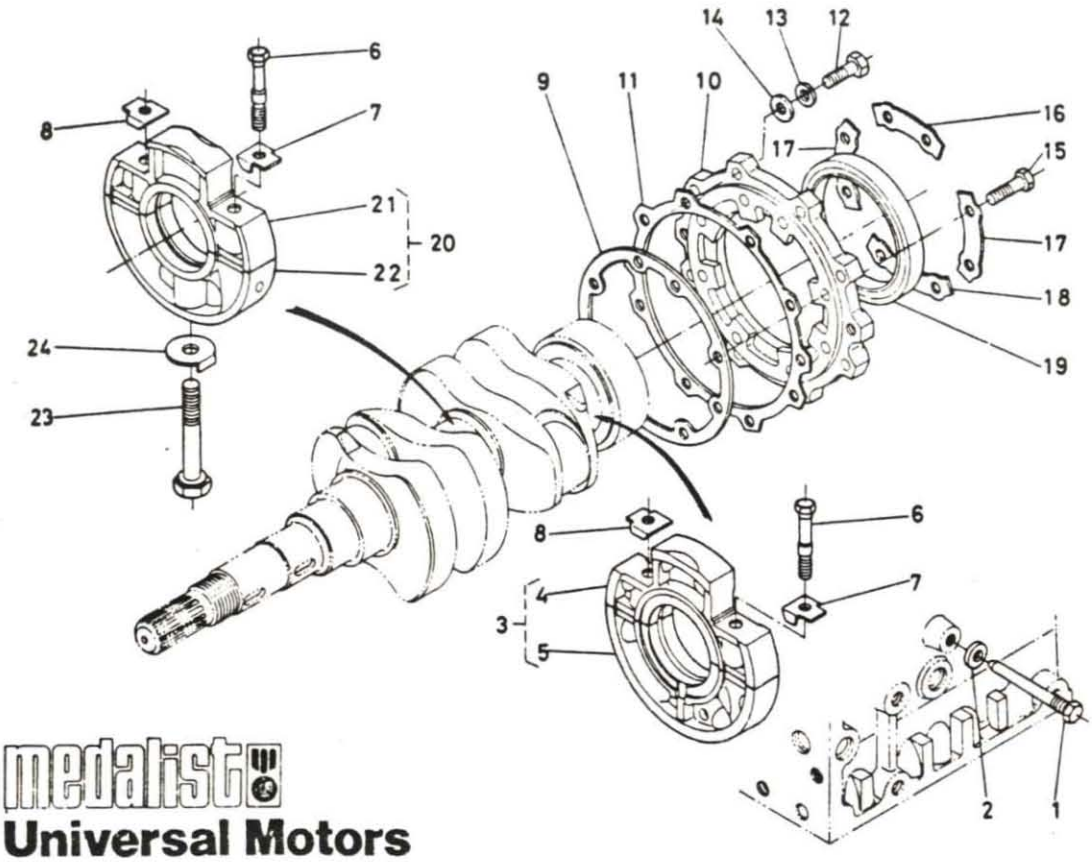

medalist
Universal Motors

ITEM	PART NO.	DESCRIPTION	UNIT
1			
2			
3	298685	Bearing Case Assembly	1
4		Case, Main Bearing 1	1
5		Case, Main Bearing 2	1
6	298686	Bolt 1	4
7	298687	Washer 1	2
8	298688	Washer 2	2
9	298689	Gasket	1
10	298690	Cover, Bearing	1
11	298691	Gasket, Cover	1
12		Bolt	8
13		Washer, Spring	8
14		Washer, Plain	8
15		Bolt	8
16	298692	Washer, Cover 1	1
17	298693	Washer, Cover 2	2
18	298694	Washer, Cover 3	1
19	298695	Seal, Oil	1
20	298696	Bearing Case Assembly 1	1
21		Case, Bearing 1-1	1
22		Case, Bearing 1-2	1
23	298697	Bolt 2	1
24	298698	Washer 3	1

HEAD COVER GROUP

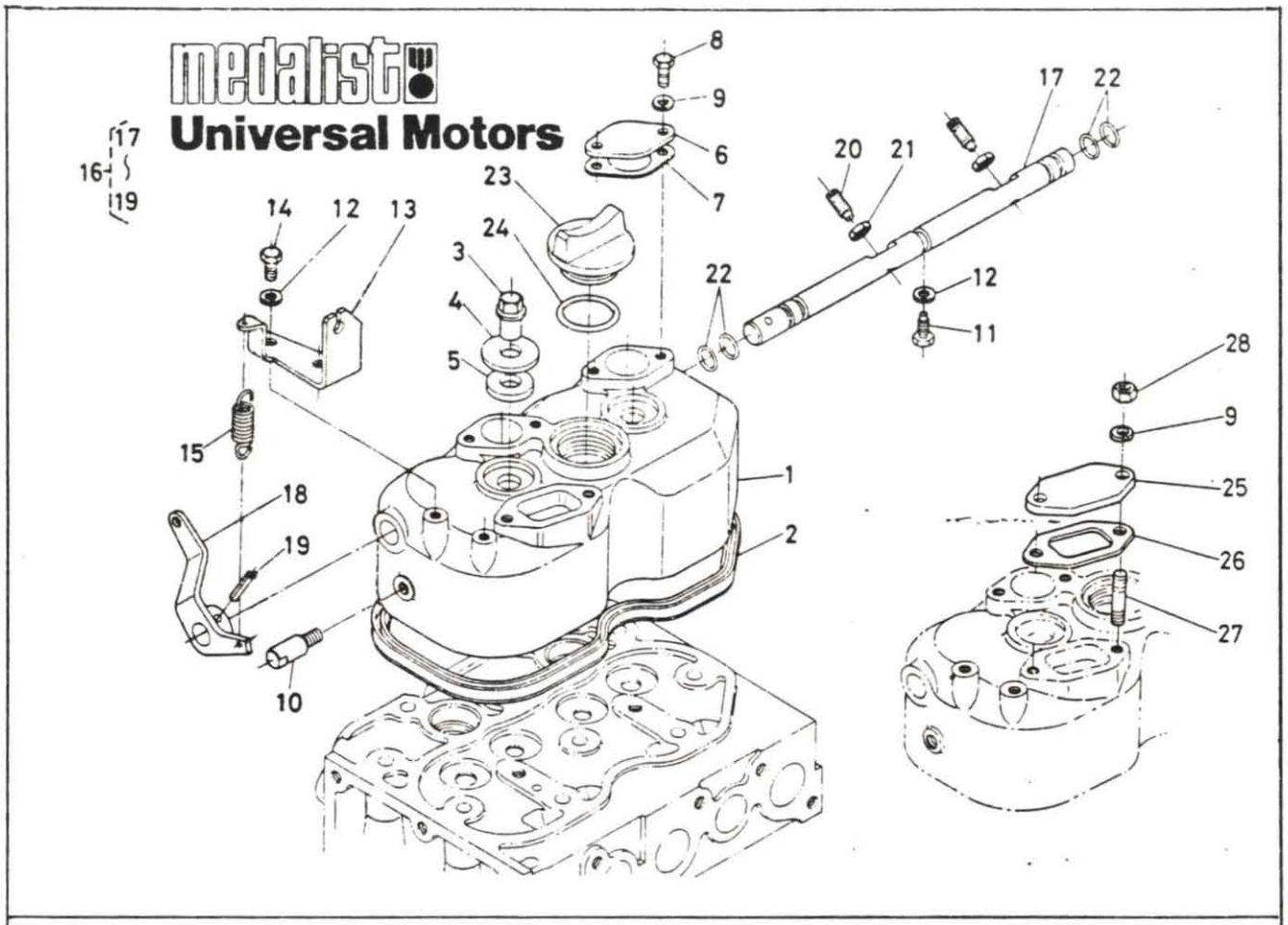

ITEM	PART NO.	DESCRIPTION	UNIT
1	298724	Cover, Cylinder Head	1
2	298725	Gasket, Head Cover	1
3	298726	Nut, Head Cover	2
4	298727	Washer, Head Cover	2
5	298728	Gasket, Nut	2
6	298729	Cover, Decompression Hole	2
7	298730	Gasket Cover	2
8		Bolt	4
9		Washer, Spring	6
10	298731	Stopper, Decompression Shaft	1
11	298732	Bolt	1
12		Washer, Spring	3
13	298733	Holder, Decompression Wire	1
14		Bolt	2
15	298734	Spring, Decompression	1
16	298735	Decompression Shaft Assembly	1
17		Shaft, Decompression	1
18		Lever, Decompression	1
19		Pin, Spring	1
20	298736	Bolt, Decompression	2
21	298737	Nut, Decompression	2
22	298738	O Ring	4
23	298739	Plug, Oil Filler	1
24	298740	O Ring	1

HEAD COVER GROUP (CONTINUED)

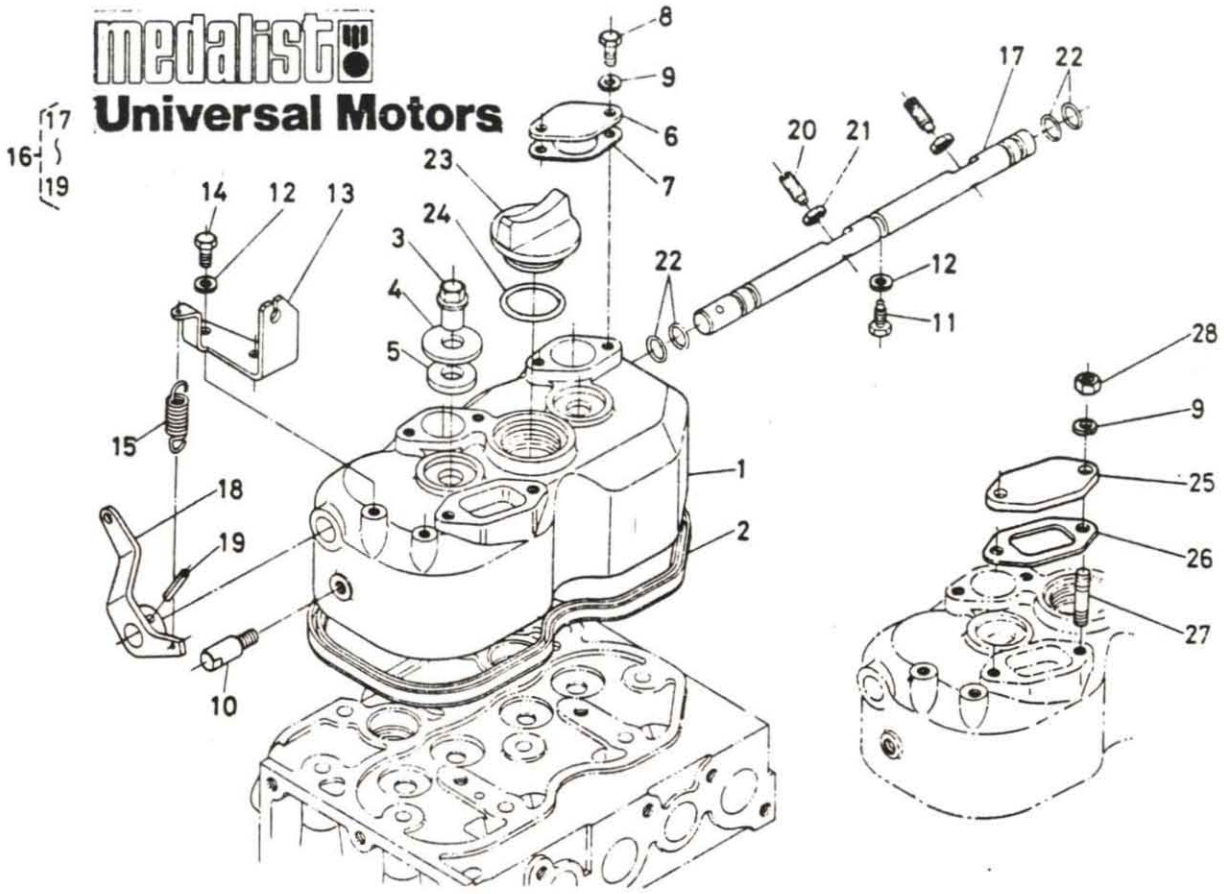

ITEM	PART NO.	DESCRIPTION	UNIT
25		Cover	1
26		Gasket, Cover	1
27		Stud	2
28		Nut	2

BREATHER GROUP

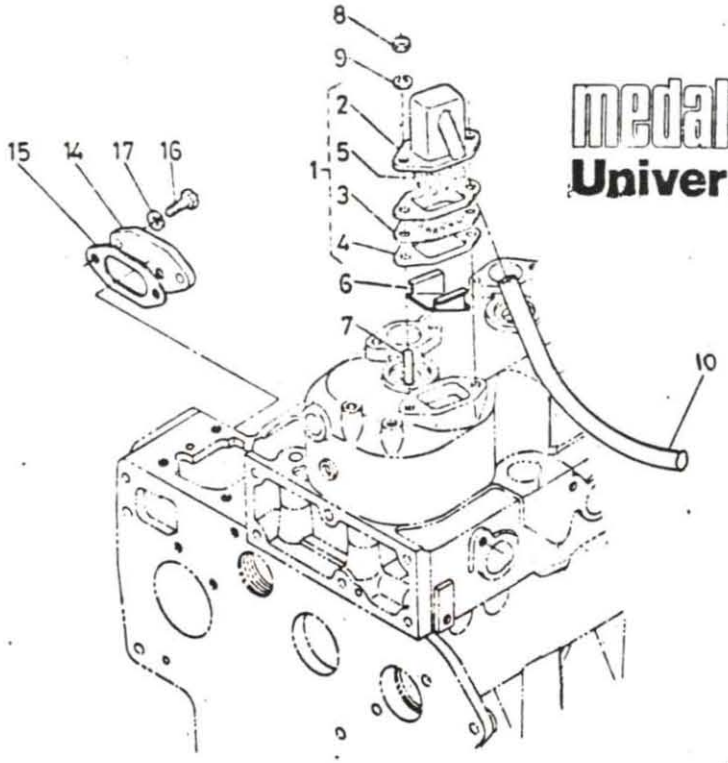

medalist Universal Motors

ITEM	PART NO.	DESCRIPTION	UNIT
1		Breather Assembly	1
2	298699	Breather	1
3	298700	Plate, Element	1
4	298701	Packing, Cover	2
5	298702	Element, Breather	1
6	298703	Oil Shield, Breather	1
7		Stud	2
8		Nut	2
9		Washer, Spring	2
10	298704	Hose, Breather	1
11			
12			
13			
14		Cover	1
15		Packing, Cover	1
16		Bolt	2
17		Washer, Spring	2
18			
19			
20			
21			
22			
23			
24			

medalist
Universal Motors

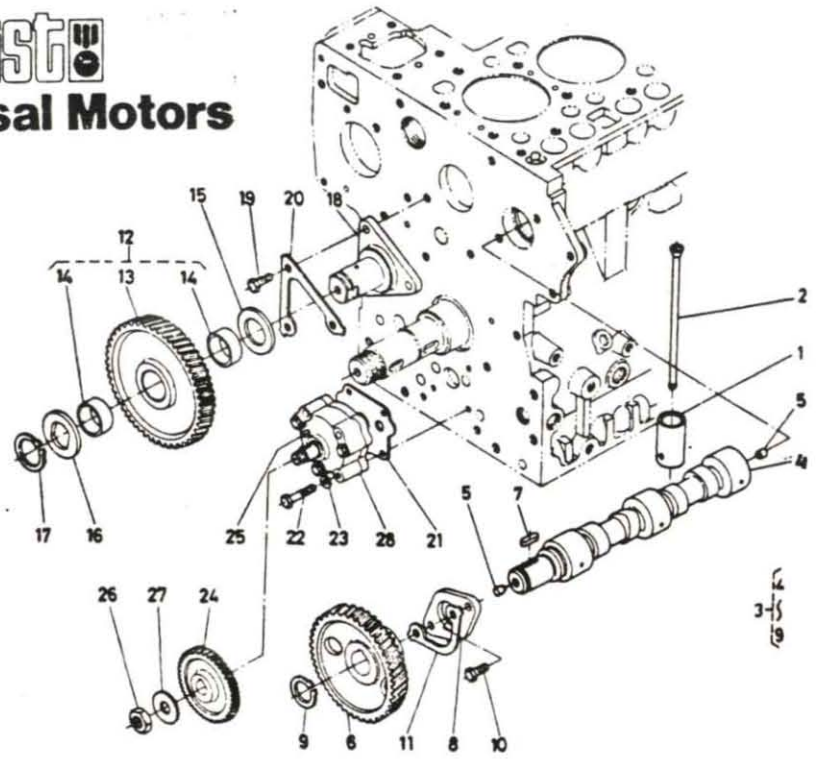

ITEM	PART NO.	DESCRIPTION	UNIT
1	298741	Tappet	4
2	298742	Rod, Push	4
3		Camshaft Assembly	1
4	298743	Camshaft	1
5	298744	Plug, Pin	2
6	298745	Gear, Camshaft	1
7	298746	Key, Feather	1
8	298747	Stopper, Camshaft	1
9	298748	Cir-Clip, External	1
10		Bolt	2
11	298749	Washer, Stopper	1
12	298750	Idle Gear Assembly	1
13		Idle Gear	1
14		Bushing, Idle Gear	2
15	298751	Collar 1, Idle Gear	1
16	298752	Collar 2, Idle Gear	1
17	298753	Cir-Clip, Idle Gear	1
18	298754	Shaft, Idle Gear	1
19		Bolt	3
20	298755	Washer, Idle Gear Shaft	1
21	298756	Gasket, Oil Pump	1
22		Bolt	4
23		Washer, Spring	4
24	298757	Gear, Oil Pump Drive	1

medalist
Universal Motors

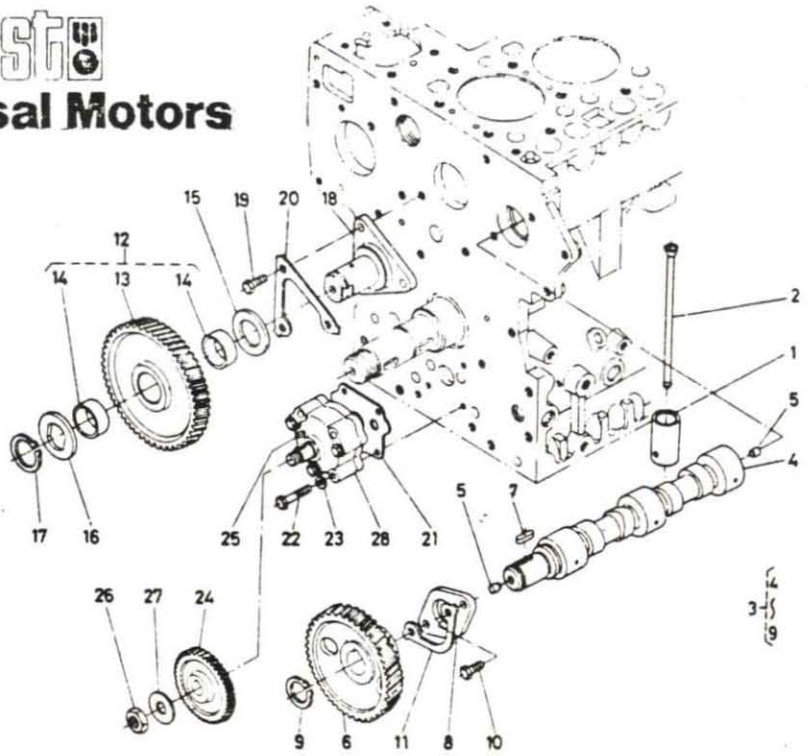

ITEM	PART NO.	DESCRIPTION	UNIT
25	298758	Key, Feather	1
26	298759	Nut	1
27	298760	Washer	1
28	298761	Oil Pump Assembly	1

PISTON, CRANKSHAFT GROUP

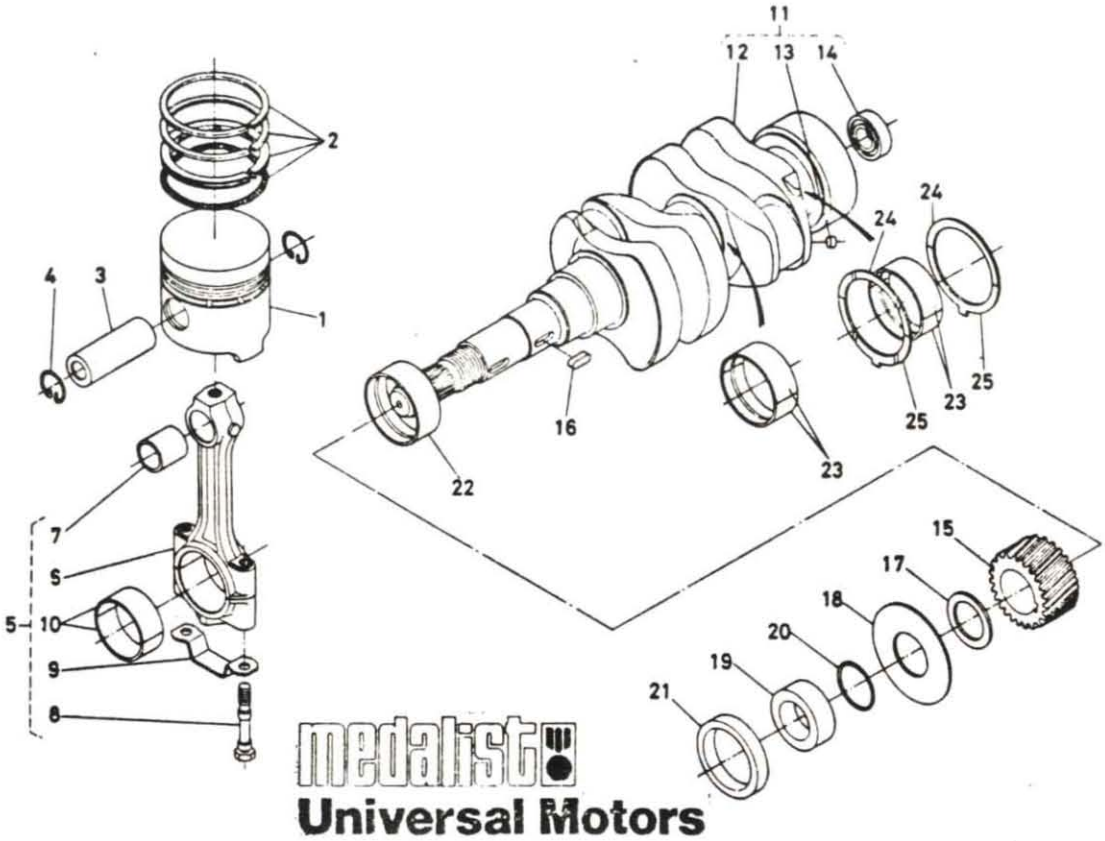

ITEM	PART NO.	DESCRIPTION	UNIT
1	298762	Piston	2
2	298763	Piston Ring Assembly	2
3	298764	Piston Pin	2
4	298765	Cir-Clip, Piston Pin	4
5	298766	Connecting Rod Assembly	2
6		Connecting Rod	1
7		Bushing, Piston Pin	1
8		Bolt, Connecting Rod	2
9		Washer, Rod Bolt	1
10	298767	Metal, Crank Pin	2
11	298768	Crank Shaft Assembly	1
12		Crank Shaft	1
13		Plug Pin	2
14		Bearing, Ball	1
15	298769	Gear, Crank Shaft	1
16		Key, Feather	1
17	298770	Collar, Crank-Gear	1
18	298771	Oil Slinger	1
19	298772	Collar, Crank Shaft	1
20	298773	O Ring	1
21	298774	Oil Seal	1
22	298775	Metal, Crank Shaft	1
23	298776	Metal, Crank Shaft	4
24	298777	Metal, Side	2
25	298778	Metal, Side	2

VALVE, ROCKER ARM GROUP

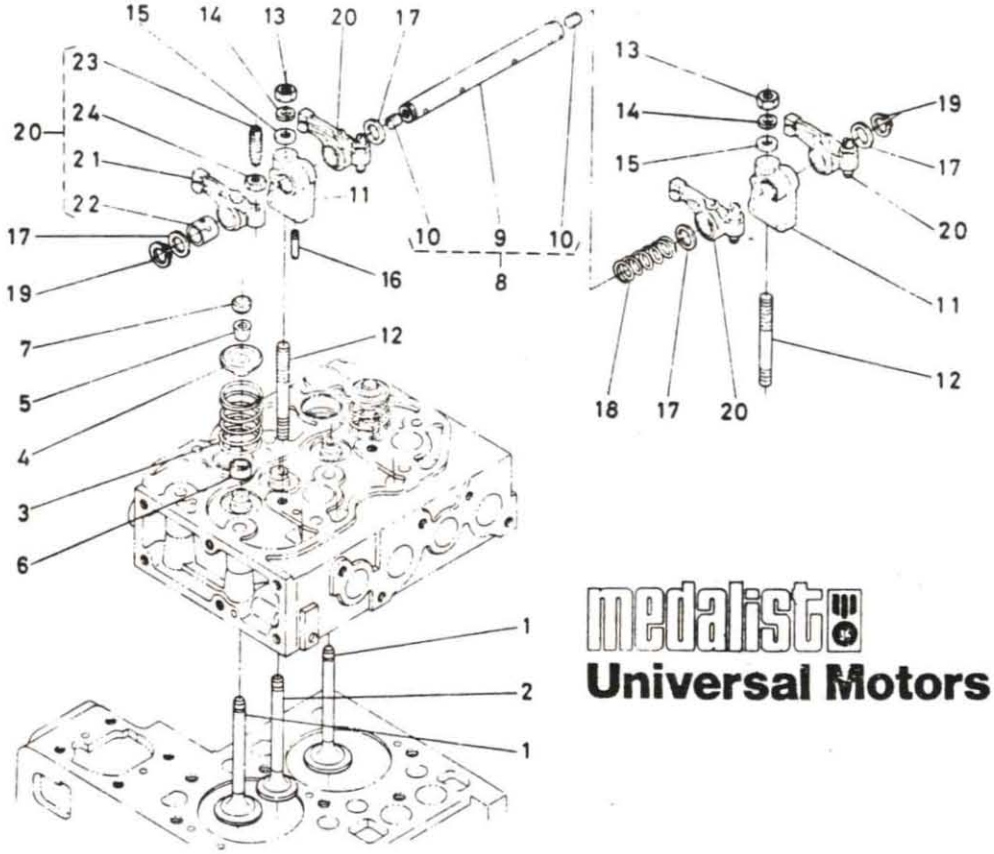

ITEM	PART NO.	DESCRIPTION	UNIT
1	298709	Inlet Valve	2
2	298710	Exhaust Valve	2
3	298711	Valve Spring	4
4	298712	Retainer, Valve Spring	4
5	298713	Collet, Valve Spring	8
6	298714	Seal, Valve Stem	4
7	298715	Cap, Valve	4
8	298716	Rocker Arm Shaft Assembly	1
9		Shaft, Rocker Arm	1
10		Set Screw	2
11	298717	Bracket, Rocker Arm	2
12	298718	Stud	2
13		Nut	2
14		Washer, Spring	2
15		Washer, Plain	2
16	298719	Set Screw	1
17	298720	Washer	4
18	298721	Spring, Rocker Arm	1
19	298722	Cir-Clip, External	2
20	298723	Rocker Arm Assembly	4
21		Rocker Arm	1
22		Bushing	1
23		Screw, Adjusting	1
24		Nut	1

FLYWHEEL GROUP

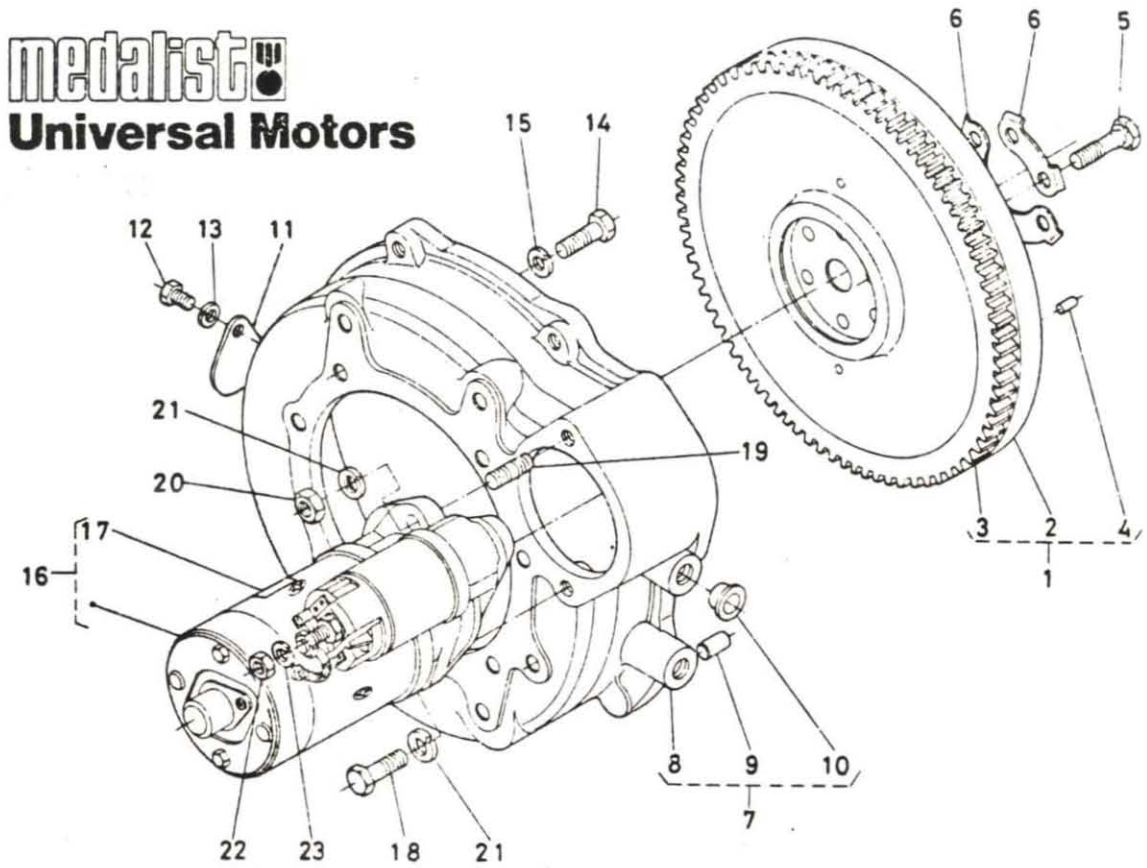

ITEM	PART NO.	DESCRIPTION	UNIT
1	298779	Flywheel Assembly	1
2		Flywheel	1
3		Gear, Ring	1
4		Pin, Straight	3
5	298780	Bolt, Flywheel	6
6	298781	Washer, Flywheel	3
7	298782	Flywheel Housing Assembly	1
8		Housing, Flywheel	1
9		Pin, Straight	2
10		Plug	4
11		Cover	1
12		Bolt	1
13		Washer, Spring	1
14		Bolt	11
15		Washer, Spring	11
16	298783	Starter Assembly (See Starter Ass'y Section)	1
17		Mark, Form	1
18		Bolt	1
19		Stud	1
20		Nut	1
21		Washer, Spring	2
22		Nut	1
23		Washer, Spring	1
24			

NOZZLE HOLDER GROUP

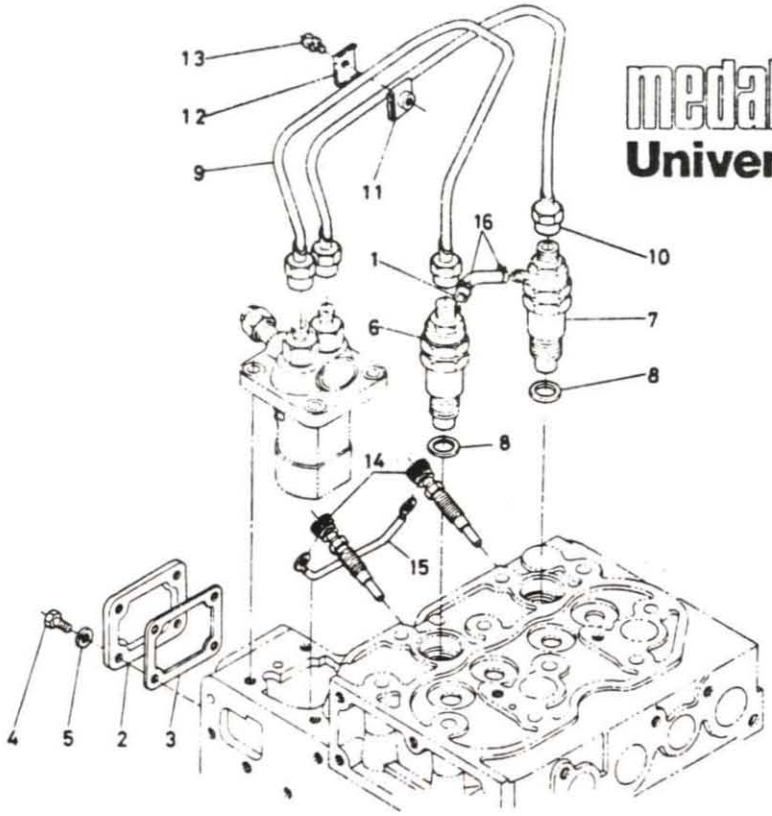

medalist
Universal Motors

ITEM	PART NO.	DESCRIPTION	UNIT
1	298784	Pipe, Fuel Over Flow	1
2	298785	Cover, Injection Pump	1
3	298786	Gasket, Pump Cover	1
4		Bolt	4
5		Washer, Spring	4
6	298787	Nozzle Holder Assembly	1
7	298788	Nozzle Holder Assembly	1
8	298789	Gasket	2
9	298790	Pipe, Injection	1
10	298791	Pipe, Injection	1
11	298792	Clamp, Pipe	1
12	298793	Clamp, Pipe	1
13	298794	Screw, With Washer	1
14	298795	Glow Plug	2
15	298796	Cord, Glow Plug	1
16	298797	Clip, Pipe	2
17			
18			
19			
20			
21			
22			
23			
24			

FUEL CAMSHAFT GROUP

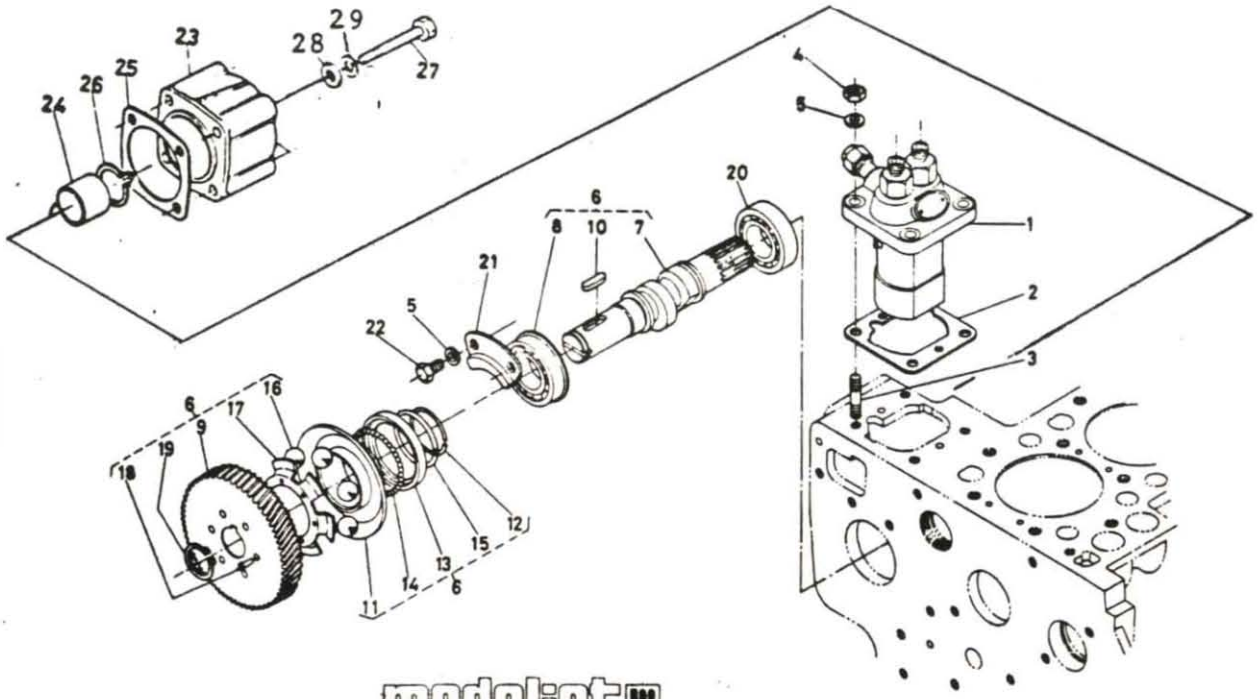

medalist
Universal Motors

ITEM	PART NO.	DESCRIPTION	UNIT
1	298798	Injection Pump Assembly	1
2	298799	Shim, Injection Pump	5
3	298800	Stud	4
4		Nut	4
5		Washer, Spring	6
6		Fuel Camshaft Assembly	1
7		Camshaft, Fuel	1
8	298816	Bearing, Ball	1
9		Injection Pump Gear	1
10	298801	Key, Feather	1
11	298802	Sleeve, Governor	1
12	298803	Cir-Clip, Sleeve	1
13	298804	Case, Governor Ball	1
14	298805	Ball	39
15	298806	Cir-Clip, Ball Case	1
16	298807	Ball	6
17	298808	Guide, Governor Ball	1
18	298809	Rivet	6
19	298810	Cir-Clip, External	1
20	298811	Bearing, Ball	1
21	298812	Stopper, Fuel Camshaft	1
22		Bolt	2
23	298813	Cover, Fuel Camshaft	1
24	298815	Collar	1

FUEL CAMSHAFT GROUP (CONTINUED)

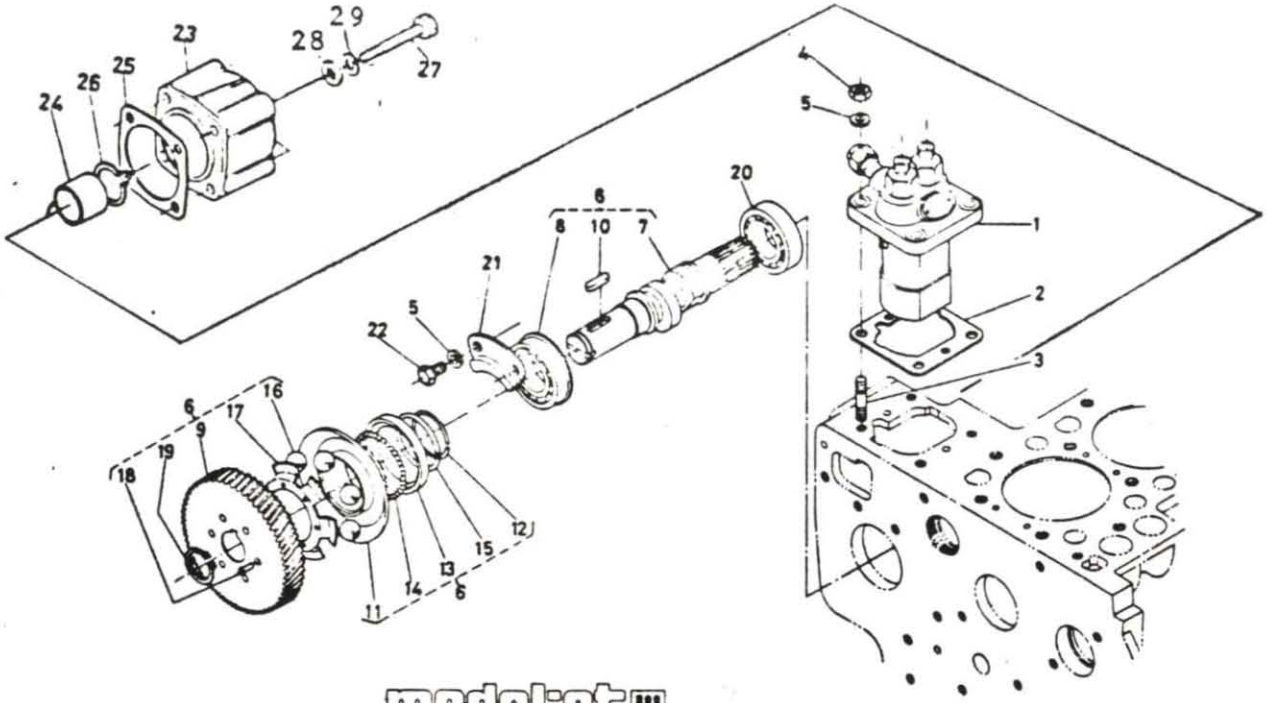

medalist III
Universal Motors

ITEM	PART NO.	DESCRIPTION	UNIT
25	298814	Gasket, Cover	1
26	298817	Cir-Clip, External	1
27		Bolt	1
28		Washer, Plain	1
29		Washer, Spring	1

SPEED CONTROL PLATE GROUP

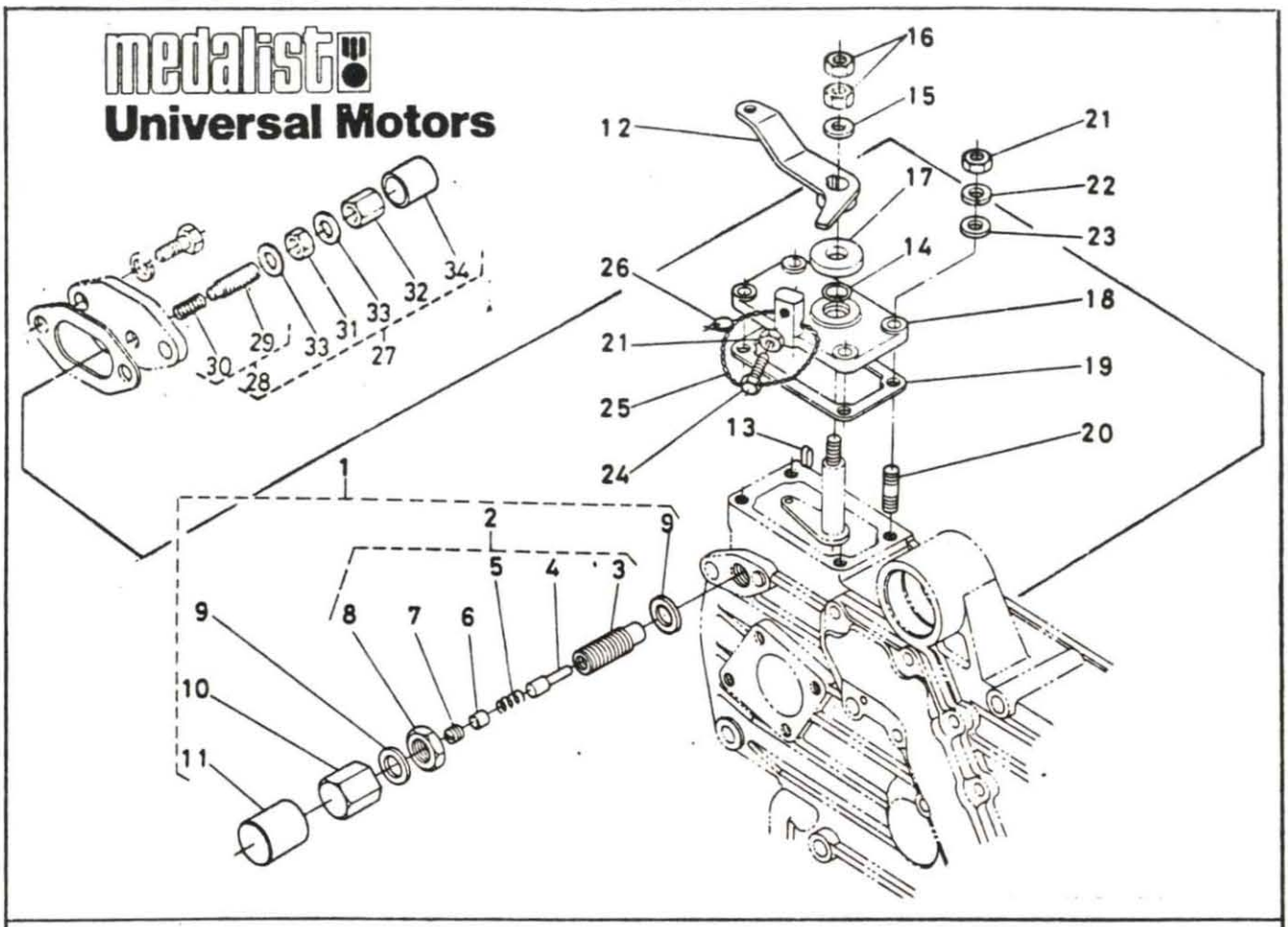

ITEM	PART NO.	DESCRIPTION	UNIT
1		Assembly Apparatus, Fuel	1
2	298818	Assembly Apparatus, Fuel	1
3		Body	1
4		Pin	1
5		Spring	1
6		Spacer	1
7		Screw, Set	1
8		Nut, Lock	1
9		Gasket	2
10		Nut, Cap	1
11		Cap	1
12	298819	Lever, Speed Control	1
13	298820	Key, Feather	1
14	298821	O Ring	1
15		Washer, Plain	1
16		Nut	2
17	298822	Plate, Friction	1
18	298823	Plate, Speed Control	1
19	298824	Gasket, Control Plate	1
20	298825	Stud	4
21		Nut	5
22		Washer, Spring	4
23		Washer, Plain	4
24	298826	Stopper	1

SPEED CONTROL PLATE GROUP (CONTINUED)

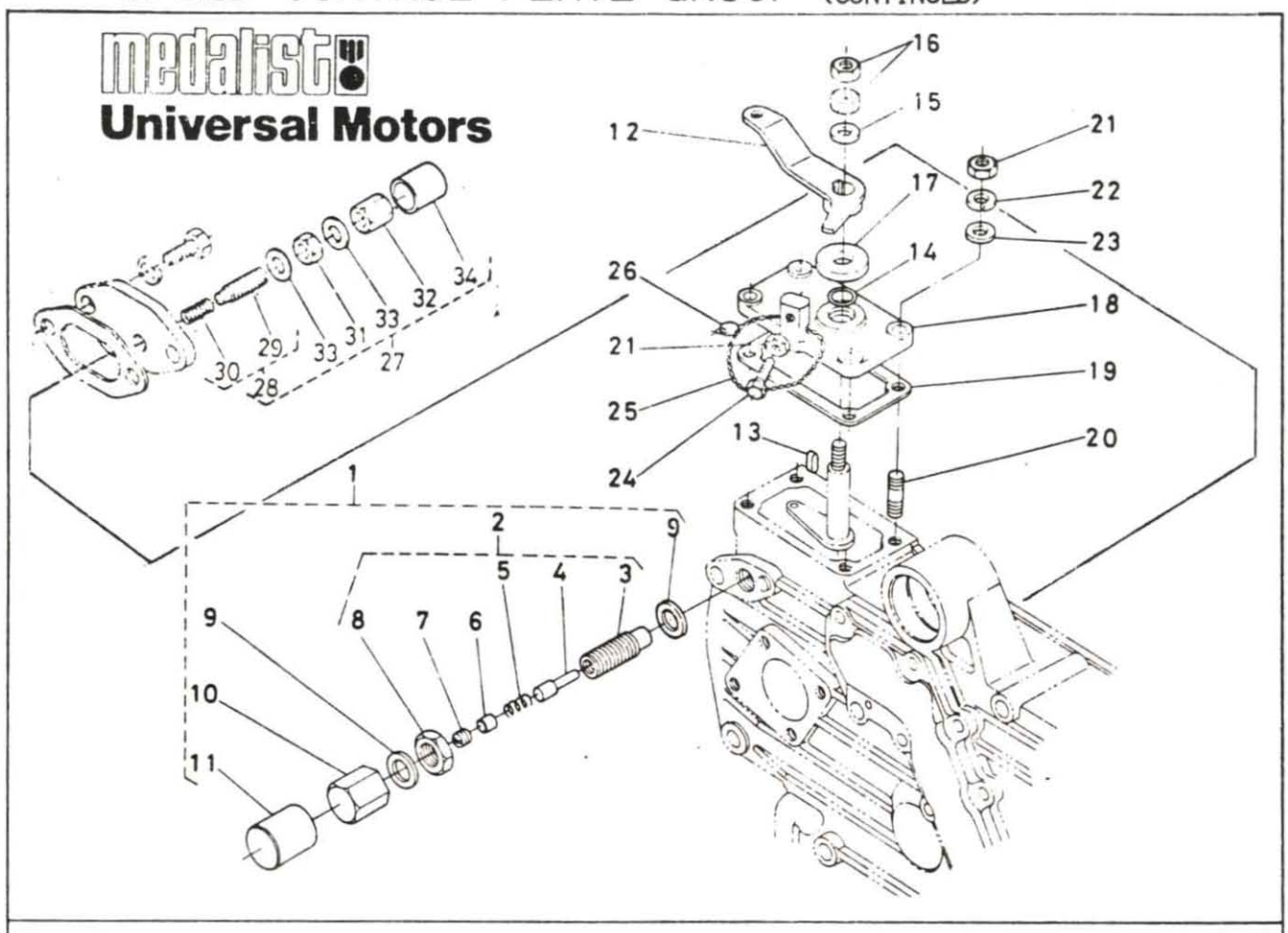

ITEM	PART NO.	DESCRIPTION	UNIT
25		Wire	1
26		Lead, Sealing	1
27		Assembly Apparatus, Idle	1
28		Assembly Bolt, Adjusting	1
29		Bolt, Adjusting	1
30		Spring	1
31		Nut	1
32		Nut Cap	1
33	299786	Packing - Gasket	2
34		Cap	1

GOVERNOR GROUP

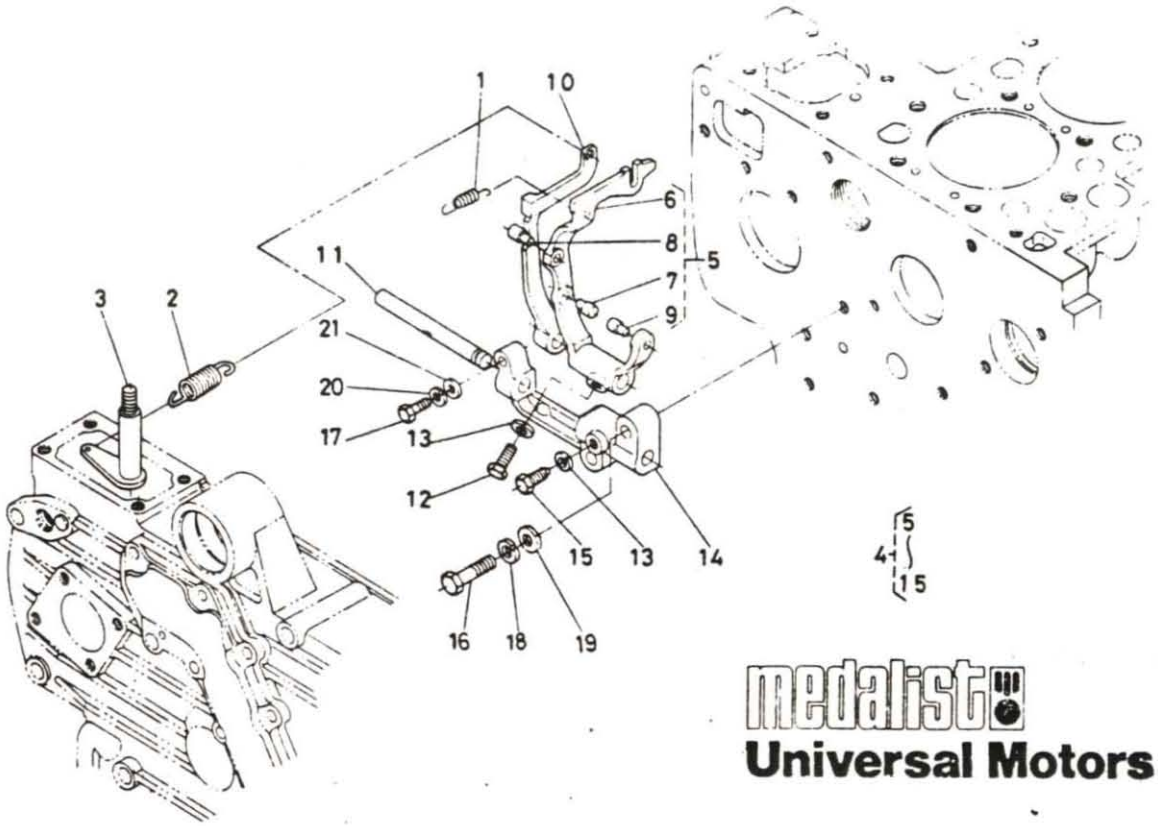

ITEM	PART NO.	DESCRIPTION	UNIT
1	298828	Spring, Start	1
2	298829	Spring, Governor	1
3		Governor Lever Assembly	1
4		Lever, Fork Assembly	1
5	298830	Lever, Fork Assembly	1
6		Lever, Fork	1
7		Pin, Fork Lever	1
8		Pin, Fork Lever	1
9		Pin, Fork Lever	1
10	298831	Lever, Fork	1
11	298832	Shaft, Fork Lever	1
12	298833	Bolt, Lever Shaft	1
13		Washer, Spring	2
14	298834	Holder, Fork Lever	1
15	298835	Bolt	1
16		Bolt	2
17		Bolt	1
18		Washer, Spring	2
19		Washer, Plain	2
20		Washer, Spring	1
21		Washer, Plain	1
22			
23			
24			

NOZZLE HOLDER GROUP

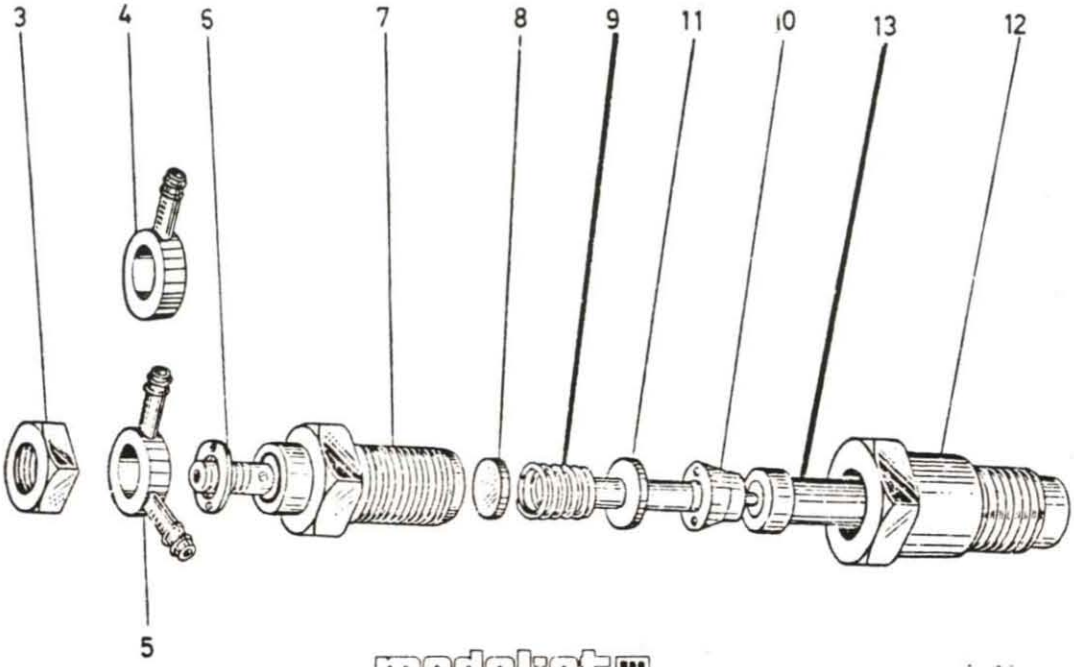

medalist
Universal Motors

ITEM	PART NO.	DESCRIPTION	UNIT
1	298787	Nozzle Holder Assembly	1
2	298788	Nozzle Holder Assembly	1
3		Nut	1
4		Joint, Eye	1
5		Joint, Eye	1
6		Washer, Plain	1
7		Body, Nozzle Holder	1
8		Washer, Adjusting	1
9		Spring, Nozzle	1
10		Piece, Distance	1
11		Rod, Push	1
12		Nut, Nozzle	1
13		Piece, Nozzle	1
14			
15			
16			
17			
18			
19			
20			
21			
22			
23			
24			

INJECTION PUMP GROUP

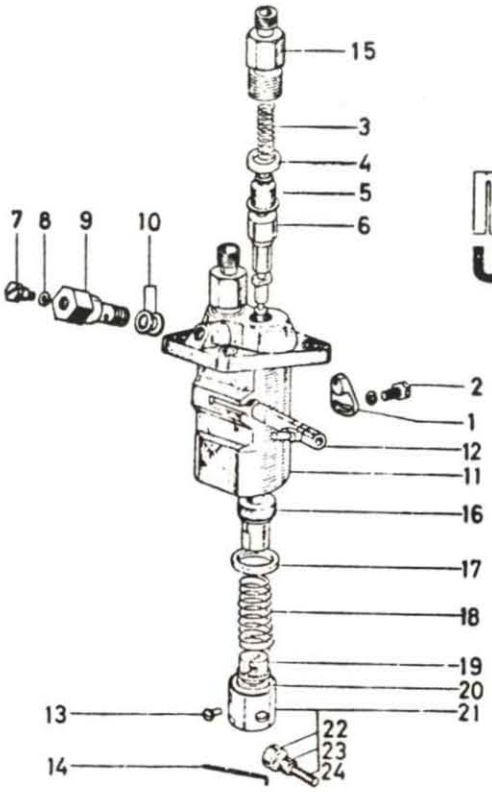

medalist Universal Motors

ITEM	PART NO.	DESCRIPTION	UNIT
1		Plate, Adjust	1
2		Bolt	1
3		Spring, Delivery Valve	2
4		Gasket, Delivery Valve	2
5		Valve, Delivery	2
6		Element, Pump	2
7		Screw	1
8		Gasket	1
9		Screw	1
10		Gasket	2
11		Housing, Pump	1
12		Rack, Control	1
13		Pin, Tappet Guide	2
14		Pin, Clamp	1
15		Holder, Delivery Valve	2
16		Sleeve, Control	2
17		Seat, Spring Upper	2
18		Spring Plunger	2
19		Seat, Spring Under	2
20		Shim	1
21		Tappett Assembly	2
22		Roller	2
23		Bushing, Roller	2
24		Pin, Roller	2

STARTER GROUP

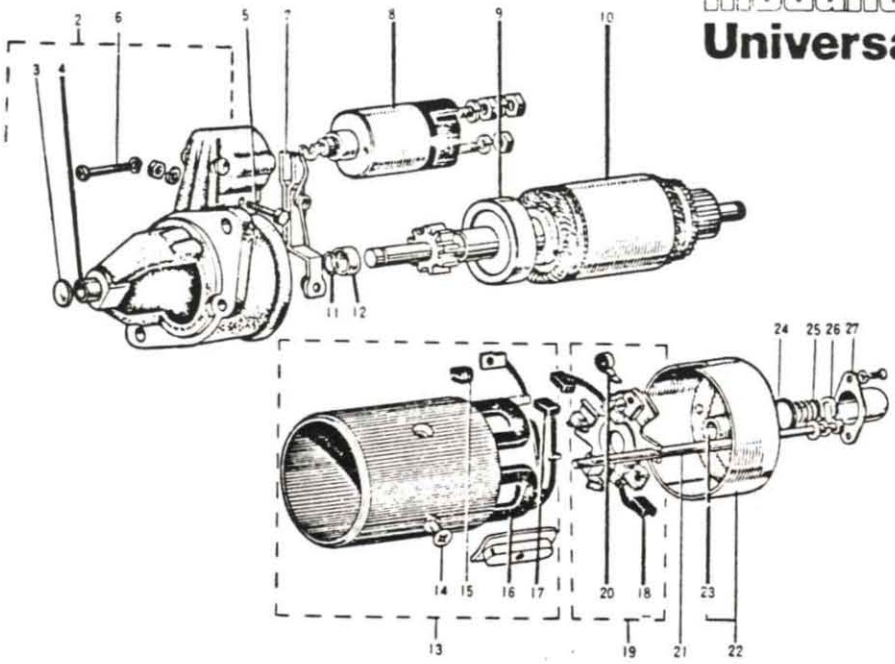

medalist
Universal Motors

ITEM	PART NO.	DESCRIPTION	UNIT
1	298783	Starter Assembly	1
2		Frame, Drive End	1
3		Plug, Expansion	1
4	299770	Bushing	1
5		Bolt, Set	1
6		Bolt	2
7		Lever, Drive	1
8	299771	Switch, Magnetic	1
9	299772	Clutch, Over Running	1
10	299773	Armature	1
11		Pin, Snap	1
12		Collar	1
13		Yoke	1
14		Bolt, Set	4
15		Gasket	1
16		Coil, Field	1
17	299774	Brush	2
18	299775	Brush	2
19		Holder, Brush	1
20	299776	Spring, Brush	1
21		Bolt, Through	2
22		Frame, End	1
23	299777	Bushing	1
24		Gasket	1

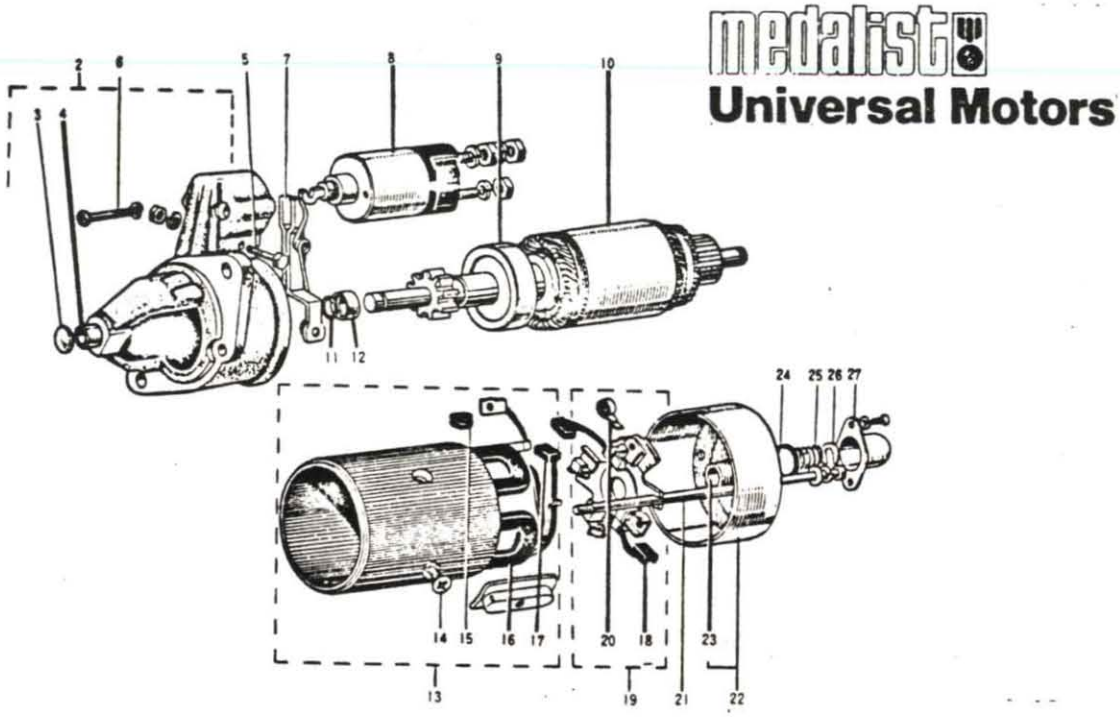

ITEM	PART NO.	DESCRIPTION	UNIT
25	299778	Spring, Return	1
26		Washer	1
27		Cap, End Frame	1

FUEL FILTER GROUP

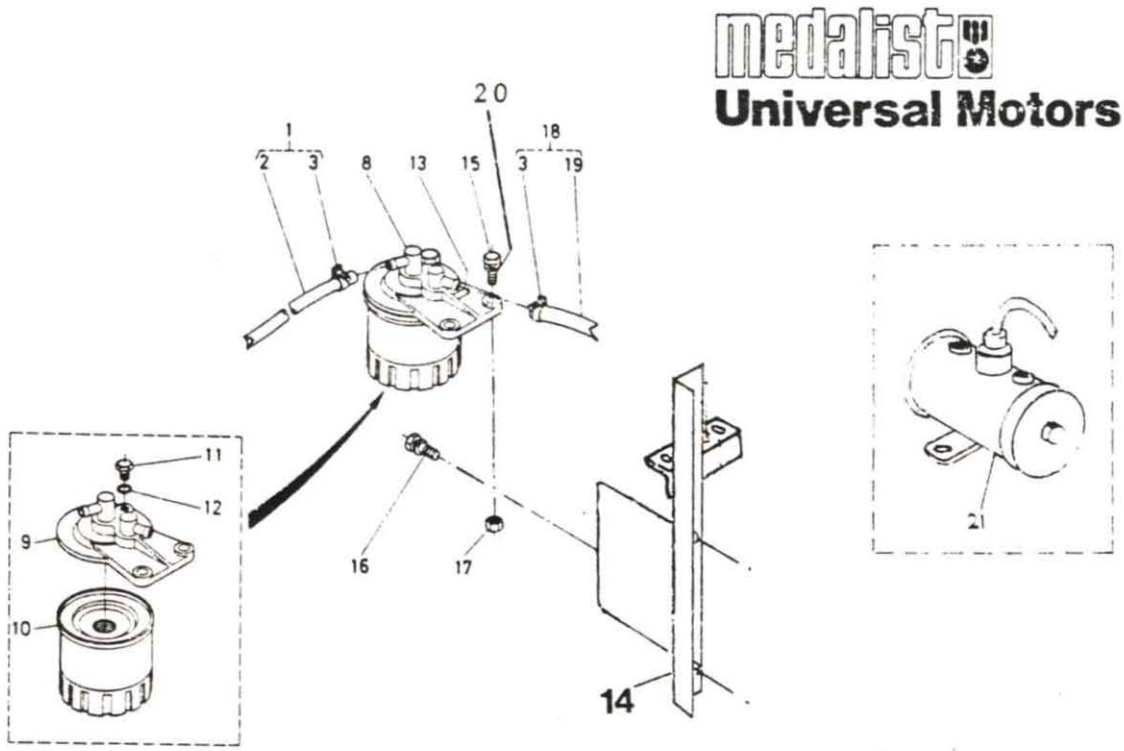

ITEM	PART NO.	DESCRIPTION	UNIT
1		Fuel Pipe Assembly	1
2		Pipe, Fuel	1
3	298605-A	Clip, Pipe	2
4		Gasket	2
5		Joint, Fuel Pipe	1
6		Pipe, Fuel	1
7		Clip, Pipe	2
8	298853	Fuel Filter Assembly	1
9		Cover, Filter	1
10	298854	Element, Filter	1
11		Plug, Filter Breather	1
12		O Ring	1
13		Mark, Form	1
14	298636	Bracket, Filter	1
15	231059	Bolt	2
16	298973	Bolt	2
17	230142	Nut	2
18		Fuel Pipe Assembly	1
19	298567	Pipe, Fuel Filter to Engine	1
20	298461	Lockwasher	1
21	299736	Electric Fuel Pump	1
22			
23			
24			

OIL FILTER 2 GROUP

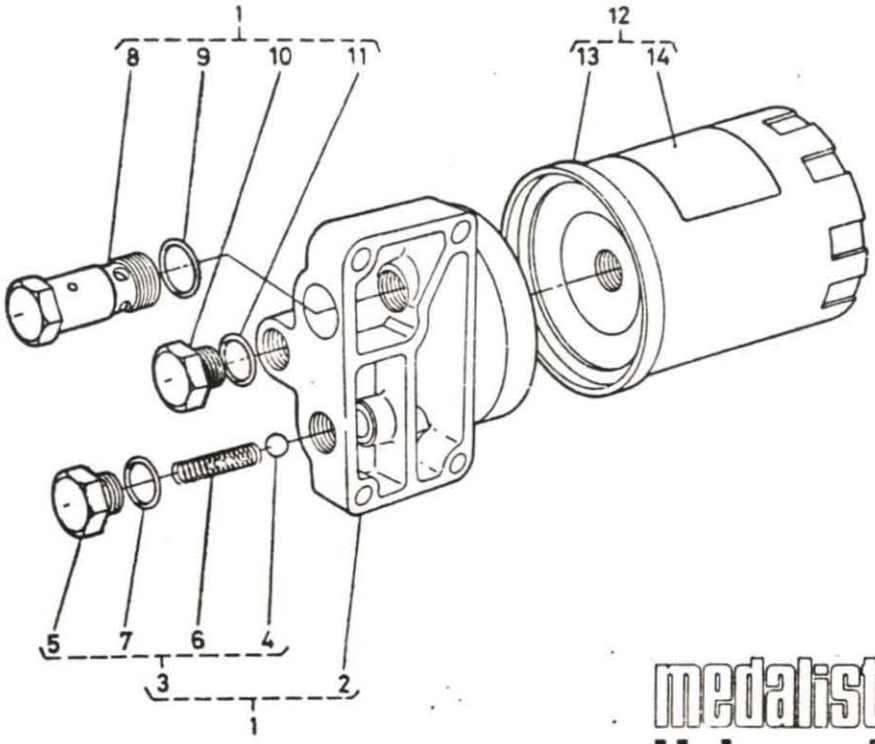

medalist
Universal Motors

ITEM	PART NO.	DESCRIPTION	UNIT
1		Assembly Cover, Filter	1
2		Cover	1
3		Assembly Valve, Safety	1
4		Valve, Safety	1
5		Plug	1
6		Spring	1
7		O Ring	1
8		Assembly Valve, Relief	1
9		O Ring	1
10		Plug	1
11		O Ring	1
12	298852	Assembly, Cartridge	1
13		Filter, Cartridge	1
14		Label, Oil Filter	1
15			
16			
17			
18			
19			
20			
21			
22			
23			
24			

WATER PUMP GROUP

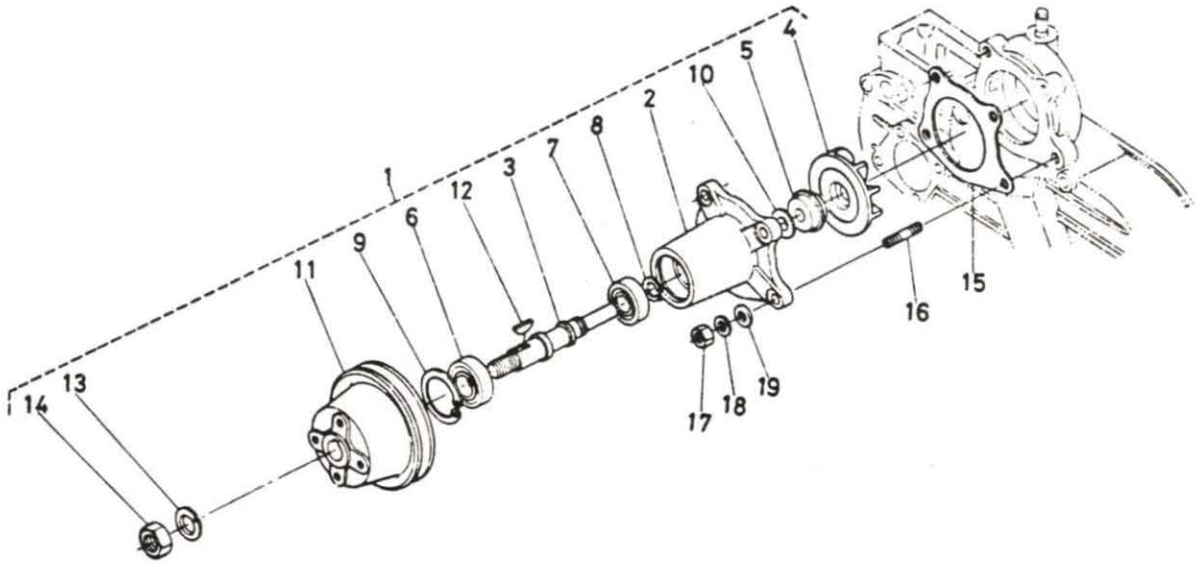

medalist
Universal Motors

ITEM	PART NO.	DESCRIPTION	UNIT
1	298845	Water Pump Assembly	1
2		Body, Water Pump	1
3		Shaft, Water Pump	1
4		Impeller, Water Pump	1
5		Set Seal	1
6		Bearing, Ball	1
7		Bearing, Ball	1
8		Cir-Clip, External	1
9		Cir-Clip, Internal	1
10		Slinger	1
11		Pulley	1
12		Key, Woodruff	1
13		Washer, Spring	1
14		Nut	1
15	298846	Gasket, Water Pump	1
16		Stud	4
17		Nut	4
18		Washer, Spring	4
19		Washer, Plain	4
20			
21			
22			
23			
24			

WATER PUMP GROUP (SHERWOOD) STARTING WITH SERIAL NO. 305359

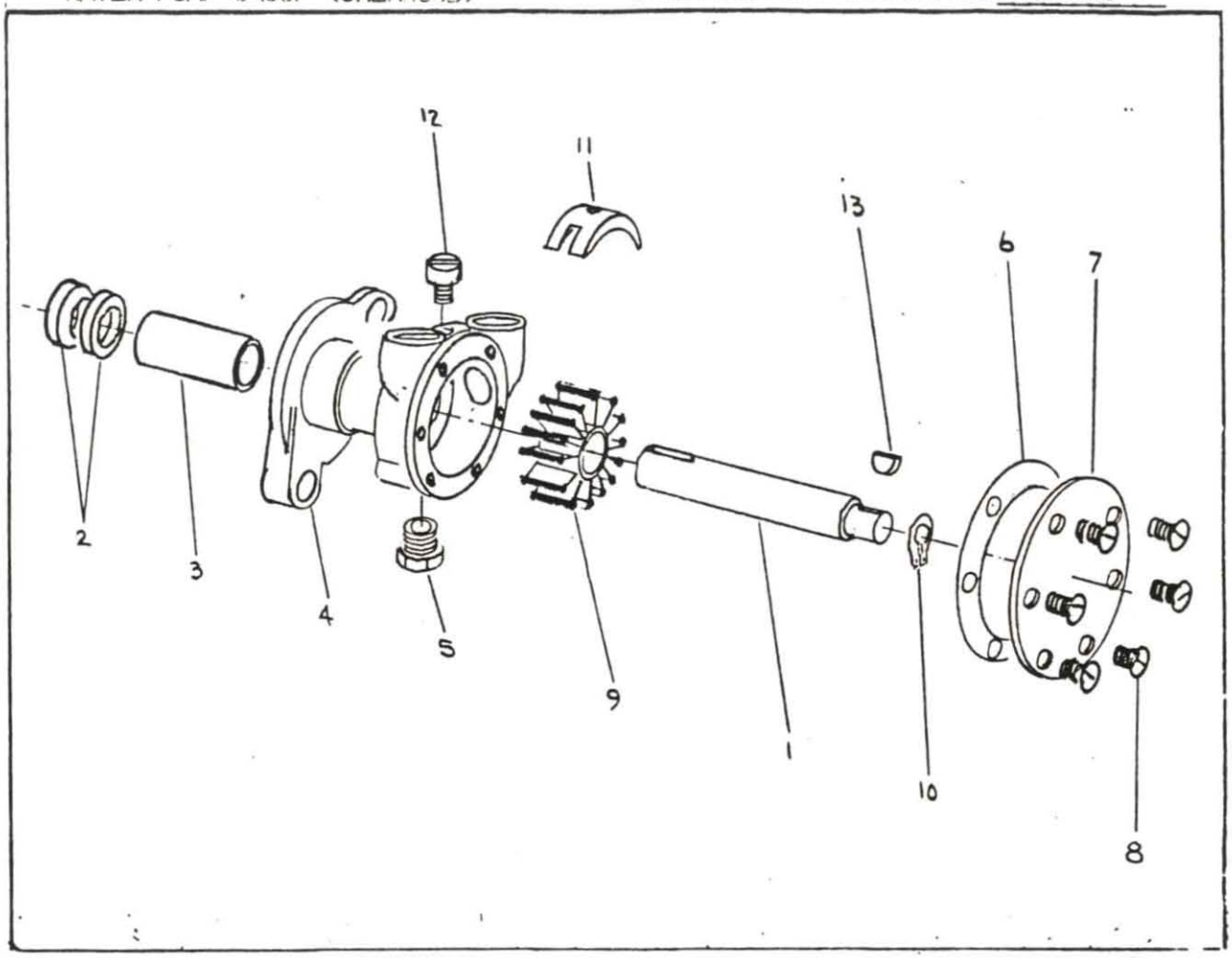

ITEM	PART NO.	DESCRIPTION	UNIT
	299805	Pump Assembly, Complete (Sherwood)	1
1	299888	Shaft	1
2	262286	Seal, Lip	2
3	299889	Bushing, Carbon	1
4	299890	Body	1
5	239136	Plug, Drain	1
6	297745	Gasket	1
7	299891	Cover	1
8	299895	Screw - 10-24 x 3/8 Long	6
9	287439	Impeller	1
10	299893	Retaining Ring - External	1
11	299894	Cam (.187)	1
12	299895	Screw - 1/4-20 x 5/16 Long	1
13	299896	Key No. 2	1
14	298477	Adaptor Plate (not shown)	1

AIR CLEANER GROUP

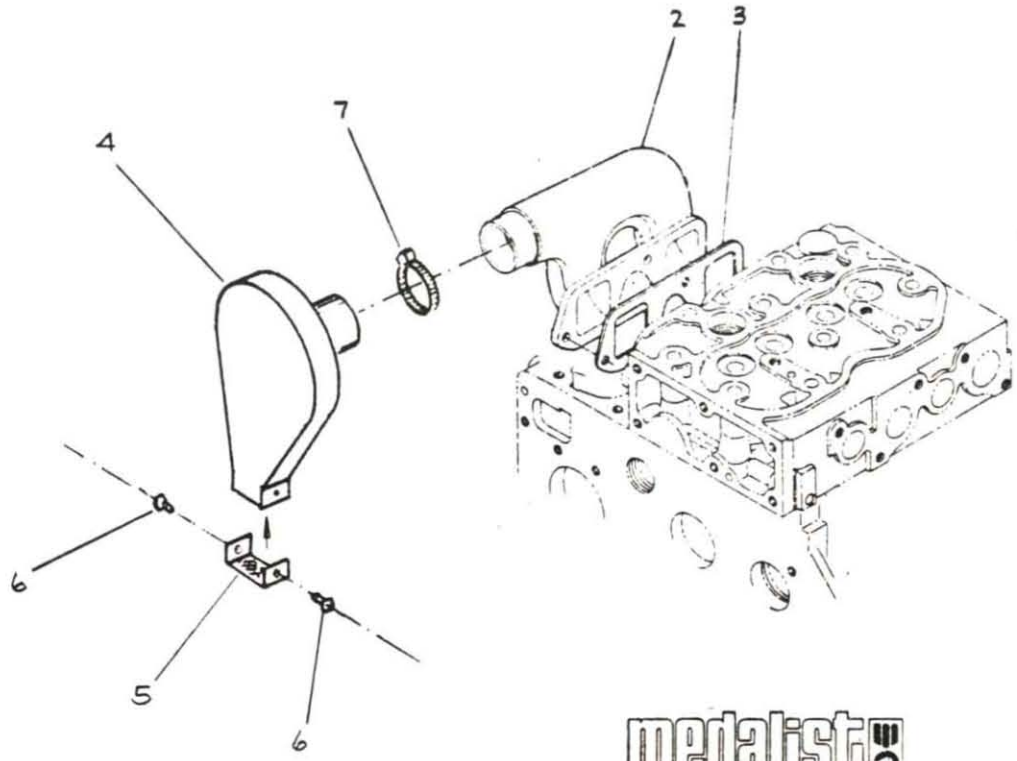

medalist
Universal Motors

ITEM	PART NO.	DESCRIPTION	UNIT
1		Air Cleaner Assembly	1
2	298706	Manifold, Inlet	1
3	298705	Gasket, Inlet Manifold	1
4	298548	Air Silencer	1
5	298563	Screen, Air Silencer	1
6	239158	Pop Rivet	2
7	298604	Clamp, Adjustable	1
8			
9			
10			
11			
12			
13			
14			
15			
16			
17			
18			
19			
20			
21			
22			
23			
24			
25			

medalist

Universal Motors

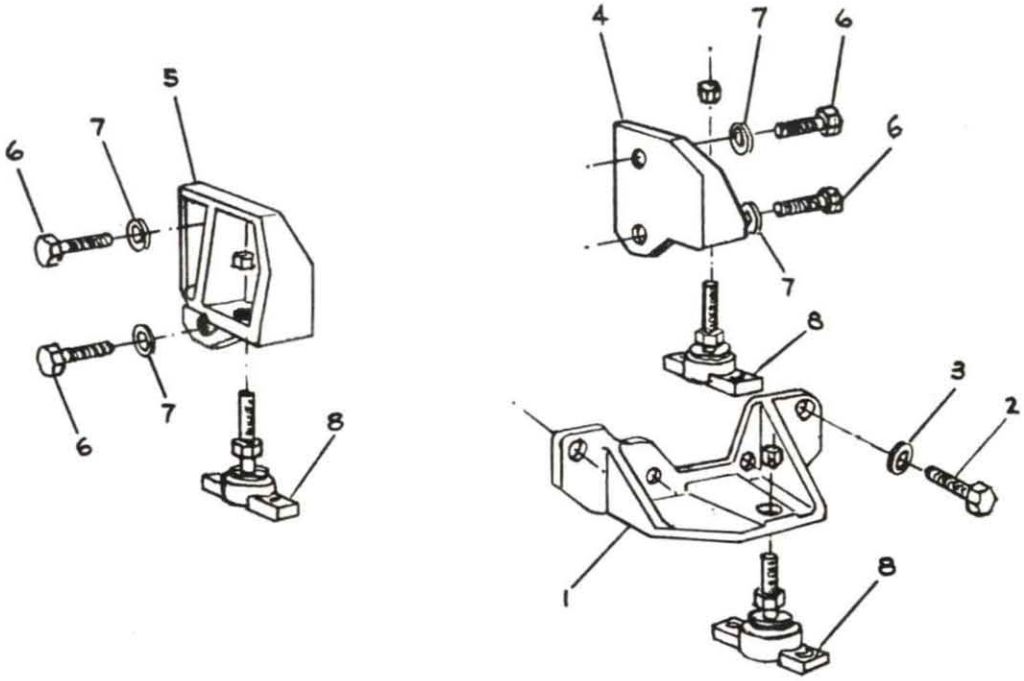

ITEM	PART NO.	DESCRIPTION	UNIT
1	298515-C	Mounting Bracket - Front	1
2	298506	Hex HD. Cap Screw (10 mm x 30 mm LG)	4
3	298463	Lock Washer - Split (10 mm Screw)	4
4	298517-C	Mounting Bracket - Rear L.H.	1
5	298519-C	Mounting Bracket - Rear R.H.	1
6	298464	Hex HD. Cap Screw (14 mm x 35 mm LG)	4
7	298465	Lock Washer - Split (14 mm Screw)	4
8	298232-B	Flexible Mount	3
9			
10			
11			
12			
13			
14			
15			
16			
17			
18			
19			
20			
21			
22			
23			
24			

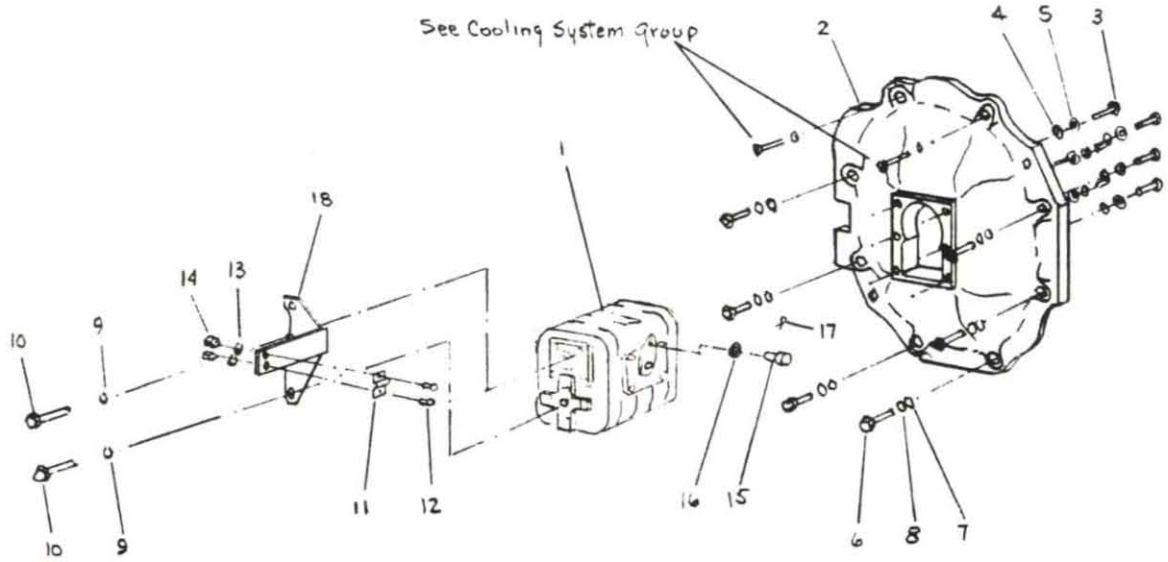

medalist

Universal Motors

ITEM	PART NO.	DESCRIPTION	UNIT
1	299155	Reverse Gear Box, Complete	1
2	298523-D	Bell Housing, Reverse Gear	1
3	298468	Hex Hd. Cap Screw (8mm x 1.25P x 25mm Long)	6
4	231875	Flat Washer, SAE 5/16	6
5	298461	Washer, Lock (8 mm Screw)	6
6	298616	Hex Hd. Cap Screw (10mm x 50mm Long)	6
7	298456	Flat Washer (.413 I.D.)	6
8	298463	Lock Washer, Split (10mm Screw)	6
9	298461	Lock Washer, Split (8mm Screw)	2
10	298895	Hex Hd. Cap Screw (8mm x 1.25P x 16mm Long)	2
11	298897	Clamp, Shift Cable to Shift Control Bracket	1
12	231224	Round Hd. Mach. Screw (#10-32 x 1/2 Long)	2
13	231890	Lock Washer, Split (#10 Screw)	2
14	230138	Hex Nut (#10-32)	2
15	298898	Pivot, Shift Cable to Reverse Gear Lever	1
16	231874	Flat Washer SAE 1/4"	1
17	230281	Cotter Pin 3/32 x 1/2"	1
18	299160	Bracket, Shift Control Mt'g Cable	1
19	299156	Damper Plate	1
20	299243	Damper Mounting Plate	1
21			
22		See Page 30A for Shaft Coupling	
23			
24			

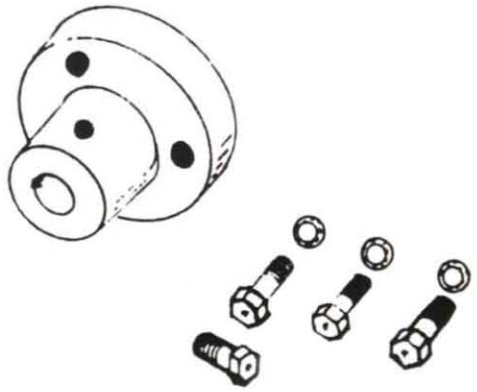

ITEM	PART NO.	DESCRIPTION	UNIT
	299640	Rigid Coupling 3/4"	
	299641	Rigid Coupling 7/8"	
	299642	Rigid Coupling 1"	
	299643	Rigid Coupling 1-1/8"	
	299644	Rigid Coupling 1-1/4"	
	238162	Screw-Sq.Hd. 3/8 - 16 x 1"	2
	239548	Screw-Hex Hed. 3/8 - 24 x 1-1/4"	4
	231910	Washer-Shake Proof	4
	230189	Nut-Jam 3/8-24	4
	298568	Flexible Coupling 3/4" - 1/4" Key	
	298569	Flexible Coupling 7/8" - 1/4" Key	
	298484	Flexible Coupling 1" - 1/4" Key	
	298570	Flexible Coupling 1-1/8" - 1/4" Key	
	299300	Flexible Coupling 1-1/4" - 5/16" Key	

THROTTLE LINKAGE CONTROL GROUP

medalist
Universal Motors

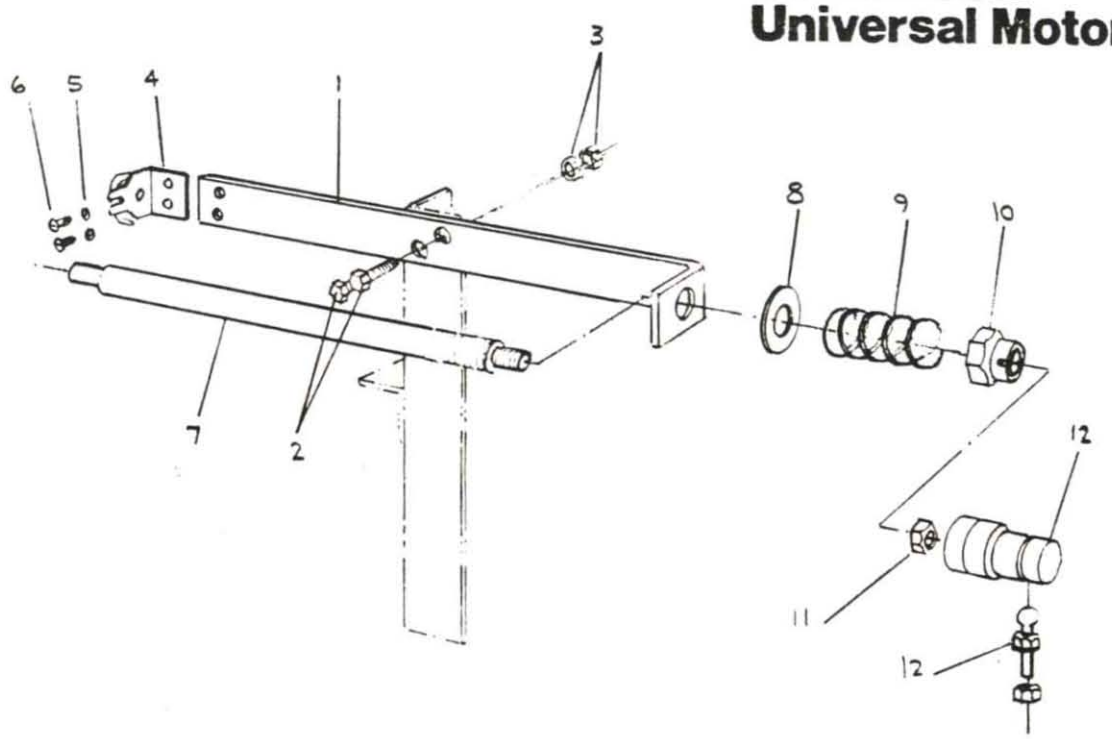

ITEM	PART NO.	DESCRIPTION	UNIT
1	298637-B	Bracket - Throttle Cable Mt'g	1
2	231035	Hex HD. Cap Screw (1/4-20 x 3/4" LG)	2
3	230257	Lock Nut-Flexlock (1/4-20)	2
4	298630	Cable Hook Clip	1
5	231890	Lock Washer, Split (#10)	2
6	231224	Rd. HD Machine Screw (#10-32 x 1/2" LG)	2
7	298638	Stud-Throttle Control Linkage	1
8	231875	Flat Washer SAE 5/16	1
9	298886	Spring, Throttle Stop	1
10	298610	Lock Nut, Flexlock (5/16 x 24)	1
11	230138	Hex, Nut (#10-32)	1
12	298629	Ball Joint, Throttle Linkage	1
13			
14			
15			
16			
17			
18			
19			
20			
21			
22			
23			
24			

DYNAMO GROUP

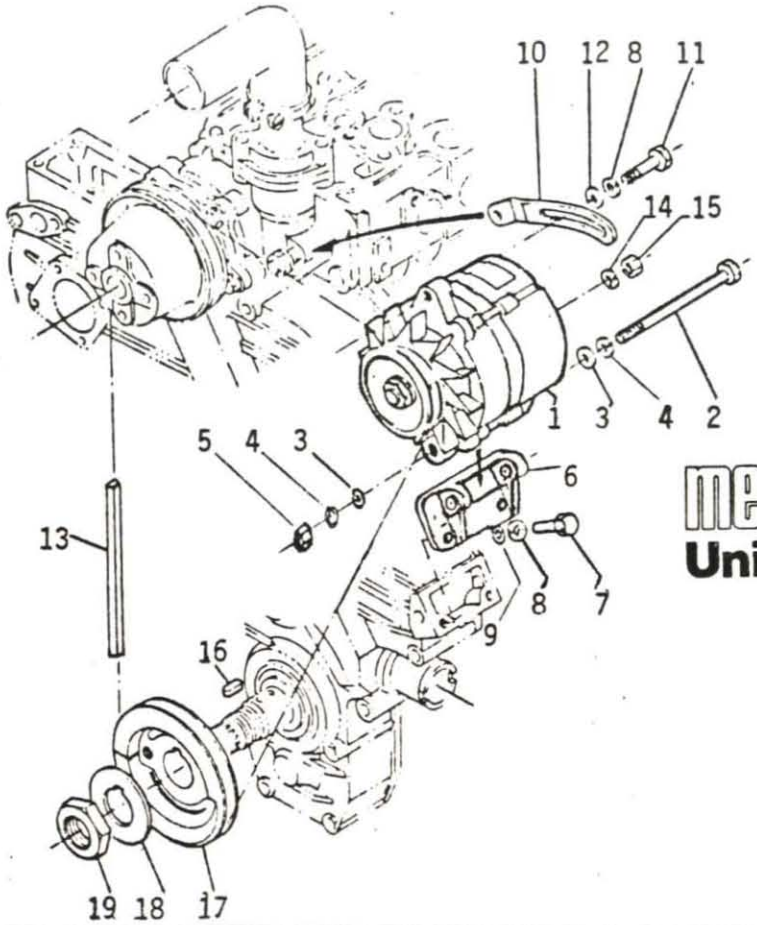

medalist Universal Motors

ITEM	PART NO.	DESCRIPTION	UNIT
1	298972-A	55 AMP Alternator & Tach A.C. Tap Kit	1
2	231093	Hex HD Cap Screw (3/8-16 x 3-3/4 Long)	1
3	231876	Washer, SAE 3/8"	2
4	285305	Washer, Split Lock 3/8"	1
5	230144	Hex Nut, 3/8-16	1
6	298521	Alternator Mounting Bracket	1
7	298468	Hex HD Cap Screw (8 mm x 1.25 x 25 mm)	2
8	298461	Washer Lock (8 mm Screw)	3
9	231875	Washer, Flat SAE 5/16	2
10	298471	Alternator Adjusting Arm	1
11	231057	Hex HD Cap Screw (5/16-18 x 3/4" Long)	1
12	231856	Washer, Flat Plain 5/16"	1
13	204002	"V" Belt	1
14	(Supplied with	Washer, Spring	1
15	Alternator)	Nut	1
16		Key, Feather	1
17		Pulley	1
18	298837	Washer, Crankshaft	1
19	298836	Nut, Crankshaft	1
20			
21			
22			
23			
24			

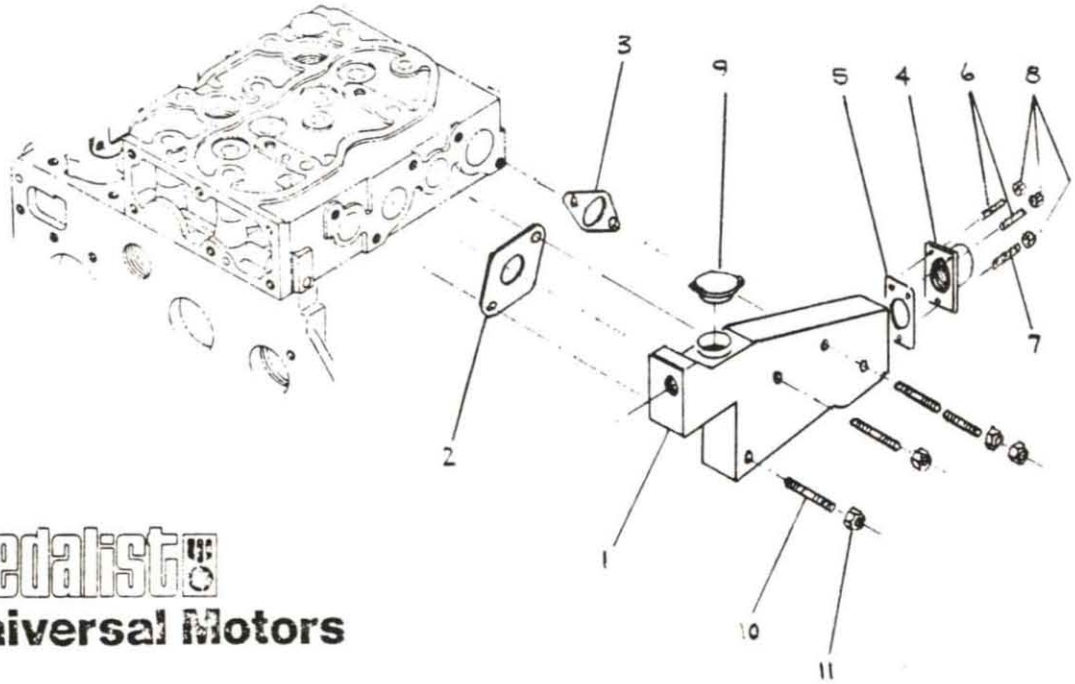

medalist
Universal Motors

ITEM	PART NO.	DESCRIPTION	UNIT
1	298595	Manifold	1
2	298707	Gasket, Exhaust Manifold	1
3	298708	Gasket, Exhaust Manifold	1
4	298599	Exhaust Flange, Manifold	1
5	298600	Gasket, Exhaust Flange	1
6	276440	Stud-Exh. Flange Mtg. (3/8-16 x 1-7/16 Lg)	2
7	298974	Stud-Exh. Flange Mtg. (3/8-16 x 2-5/8 Lg)	1
8	230147	Hex Nut, Exh. Flange Mtg. (3/8-24)	3
9	298576	Radiator Cap, Pressurized 7# PSI	1
10	298635	Stud-Exh. Manifold (8 mm x 1.25 P x 102 mm)	4
11	298466	Hex Nut, Exh. Manifold (8 mm x 1.25 P)	4
12			
13			
14			
15			
16			
17			
18			
19			
20			
21			
22			
23			
24			

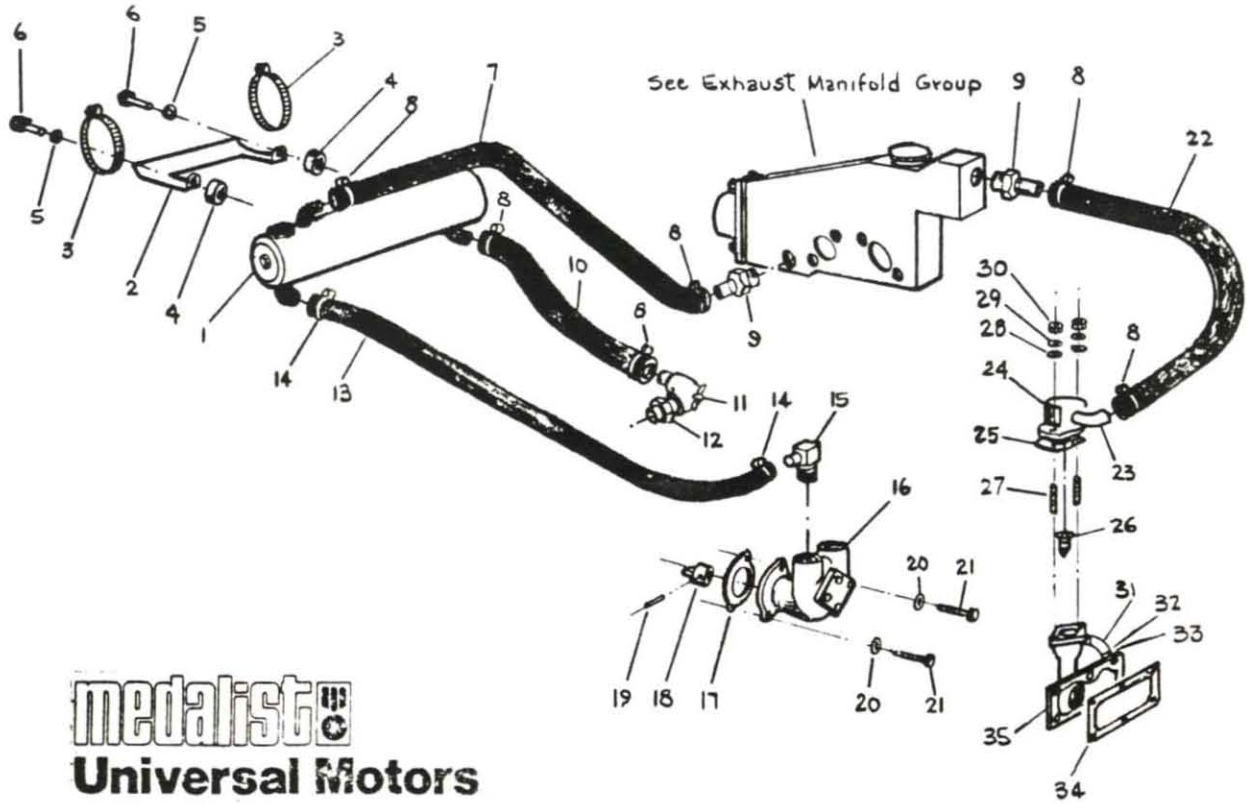

ITEM	PART NO.	DESCRIPTION	UNIT
1	298633	Heat Exchanger	1
2	298632	Support Bracket	1
3	294386	Clamp, Heat Exchanger	2
4	298634	Spacer	2
5	298463-A	Washer, Lock Split (10 mm)	2
6	298617-A	Hex HD Cap Screw (10 mm x 1.25P x 55 mm LG)	2
7	298646	Hose 7/8 10 x 8-1/2 Long	1
8	298648	Hose Clamp	6
9	286075	Hose Connector	2
10	298647-A	Hose 7/8 10 x 16 Long	1
11	239138	Drain Cock 1/8"	1
12	298641	Hose and Drain Adaptor	1
13	298642-A	Hose 1/2 10 x 21-1/2 Long	1
14	374747-A	Hose Clamp	2
15	241019	Hose Fitting 90" x 3/8	1
16	299805	Raw Water Pump	1
17	261044-A	Gasket, Raw Water Pump Mt'g	1
18	298478	Coupling, Water Pump	1
19	230371	Roll Pin, 3/16 x 7/8 Long	1
20	285305	Washer, Lock Split 3/8	2
21	231080	Hex HD Cap Screw (3/8-16 x 1" Long)	2
22	298645	Hose 7/8 10 x 4-3/4 Long	1
23	298644	Hose Connector	1
24	298583	Thermostat Housing	1

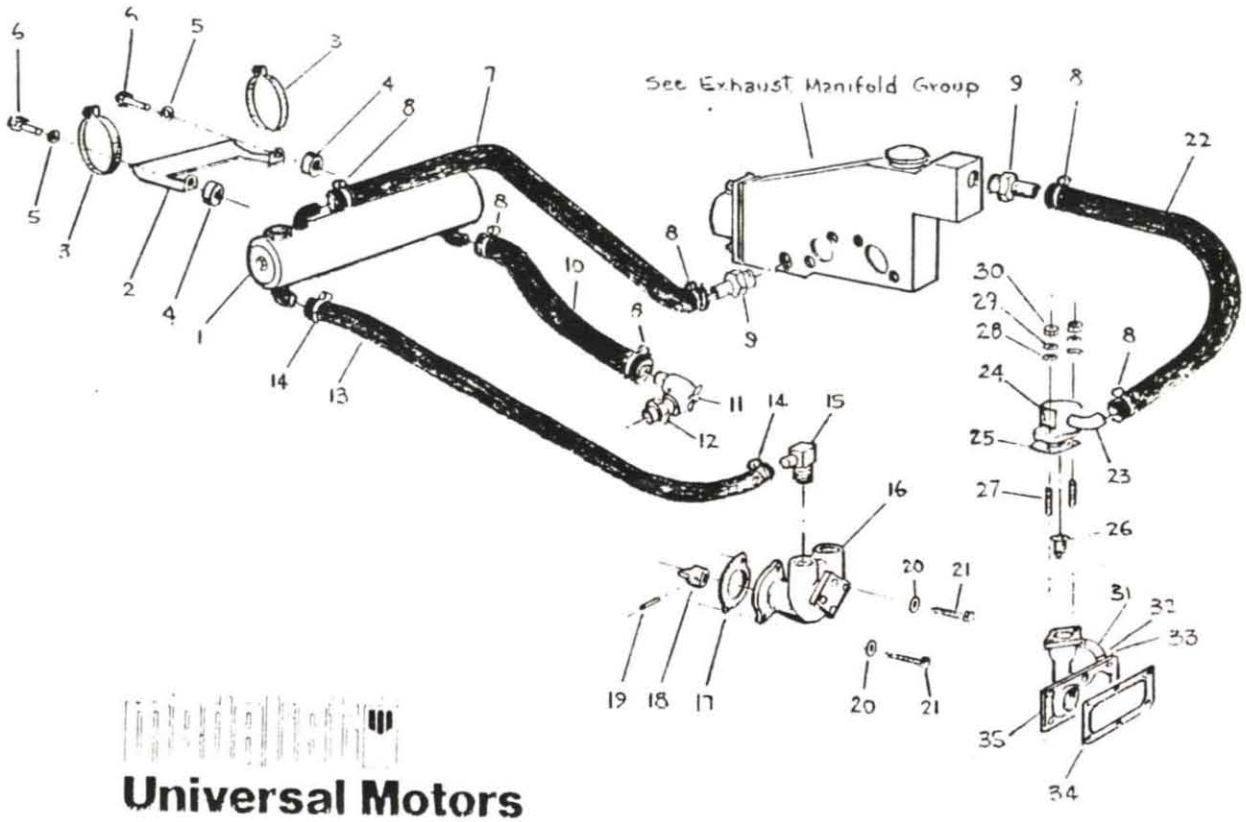

ITEM	PART NO.	DESCRIPTION	UNIT
25	298843	Gasket, Thermostat Housing	1
26	299798	Thermostat Assembly	1
27		Stud	2
28		Washer, Plain	2
29		Washer, Lock Split	2
30		Hex Nut	2
31	298841	Hose, Water Return	1
32	298842	Clamp, Hose	2
33	298840	Pipe, Water Return	1
34	298839	Gasket, Water Flange	1
35	298838	Flange, Water	1
36	299066	Temperature Sender (Not Shown)	
37			
38			
39			
40	298904	Spare Parts Kit (Not Shown)	1
41	262249	Hand Sump Pump (Not Shown)	1
42			
43			
44			
45			
46			
47			
48			

INSTRUMENT PANEL

PART NO.	DESCRIPTION	UNIT
298559	Instrument Panel Complete	Optional
298572	Panel	1
298385	Ammeter	1
299240	Oil Indicator Light	1
298383	Temperature Gauge	1
299190	Ignition Switch	1
299650	Blower Switch	1
299754	Blower Switch Plate	1
299839	Glo Plug Switch	1
299755	Glo Plug Switch Plate	1
299756	Caution Plate	1
299651	Fuse - 10A	1
299066	Temperature Sender - 1/4"	1
298584	Panel Harness	1
298585	10 Ft. Extension Harness	1
298586	Engine Wire Harness	1
	OR	
299732	Instrument Panel Complete with 299263 Tachometer and All Other Components Listed Above.	
256748	Spare Parts Kit	Optional
256736	Gasket Set	Optional

Universal Diesel
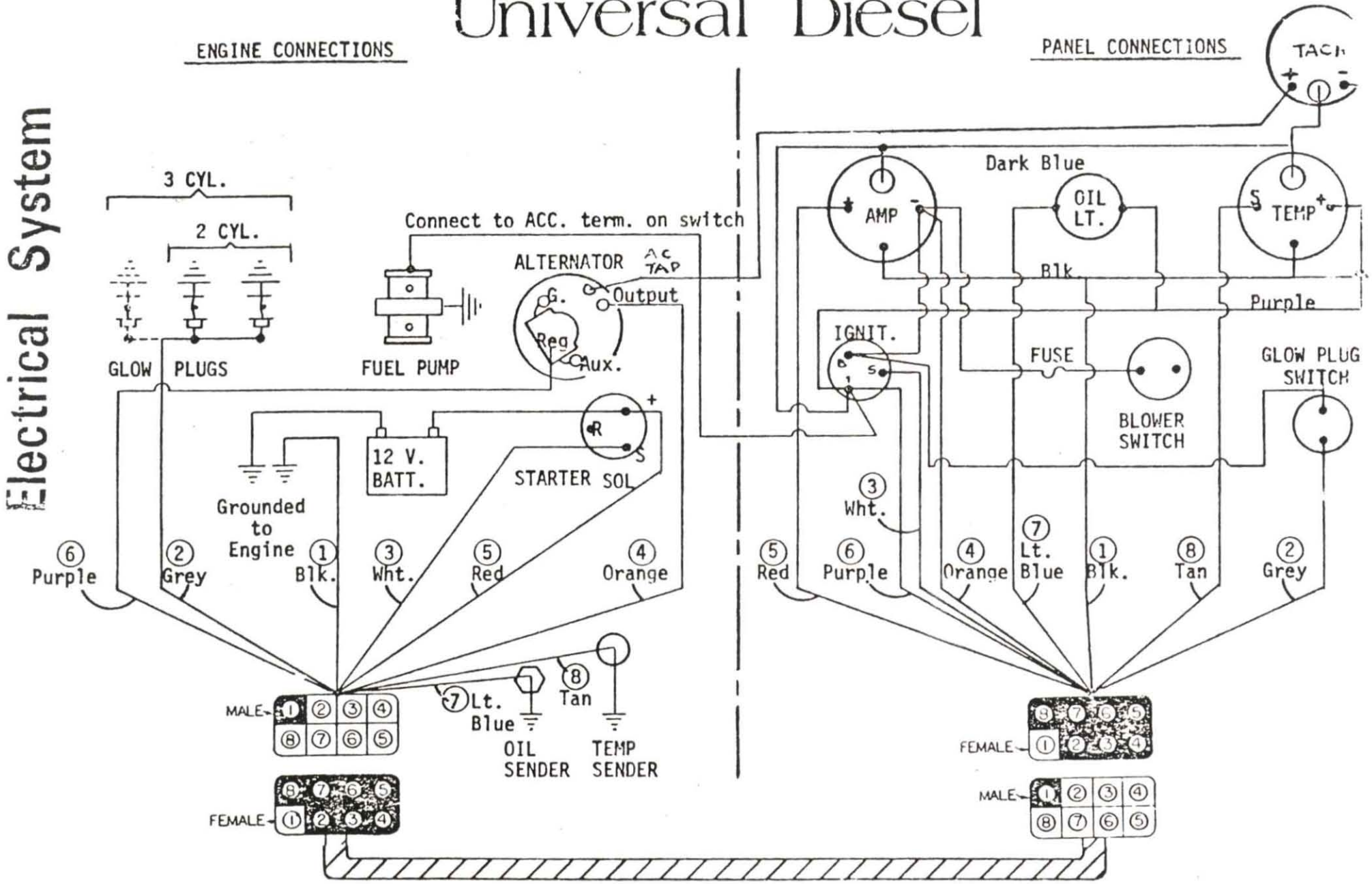
Electrical System