ITEM NO.	G702/QTY.	DESCRIPTION	PART NUMBER
1	1	EXT. RETAINING RING	04258
2	1	INT. RETAINING RING	04259
3	1	FLAT WASHER	04264
4	1	IMPELLER	10077
5	1	WOODRUFF KEY	10093
6	1	SEAL SEAT	10389
7	1	MECHANICAL SEAL	18035
8	1	O-RING	21303
9	1	OIL SEAL	21751
10	1	SPACER	21974
11	1	SHAFT	22769
12	1	O-RING	22770
13	2	BALL BEARING	23448
14	1	HOUSING	24524
15	1	BODY	24525
16	1	WEAR PLATE	24526
17	3	M6-1X35 HEX HEAD CAP SCREW	24537
18	3	LOCK WASHER	24538

PART NUMBER G702

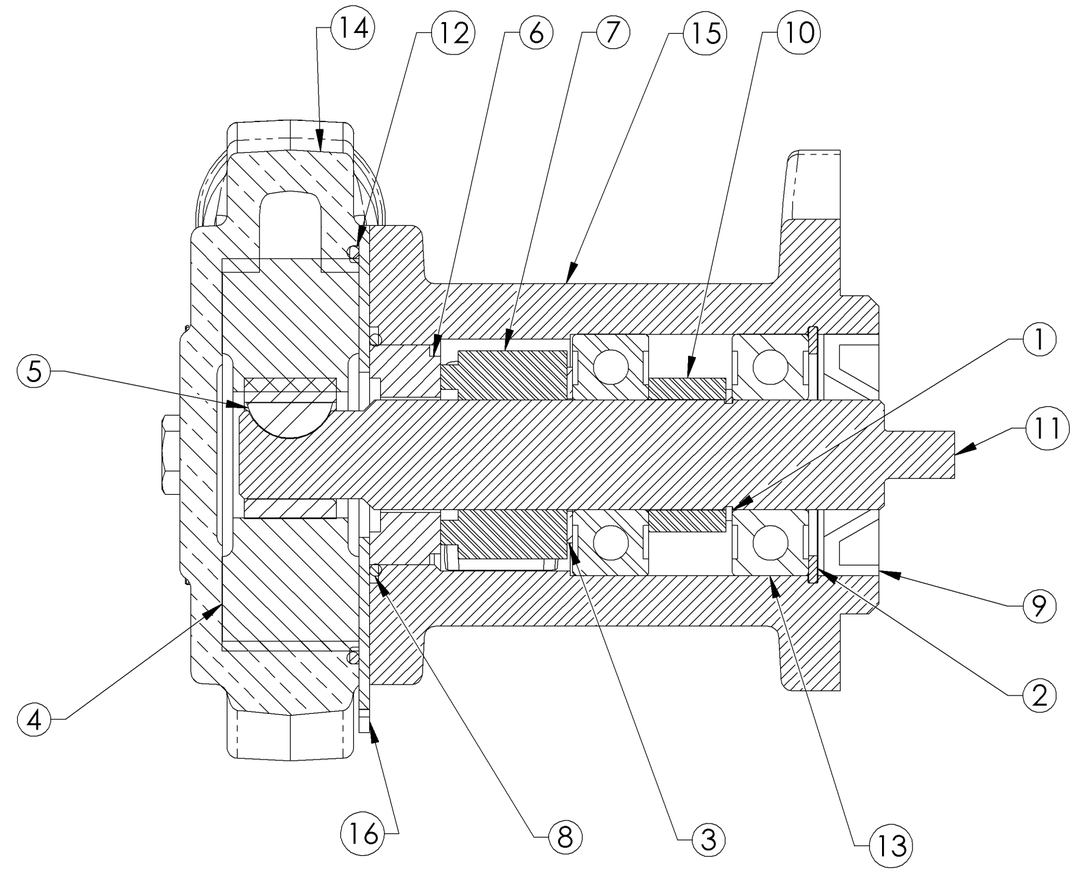

SECTION A-A
SCALE 1.5 : 1

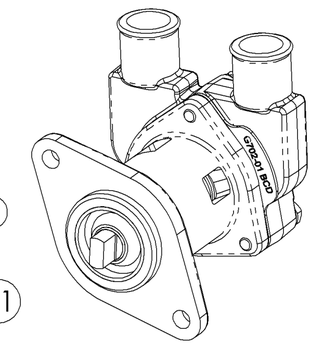

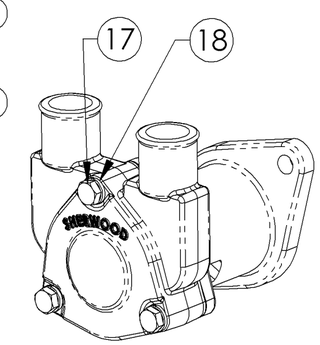

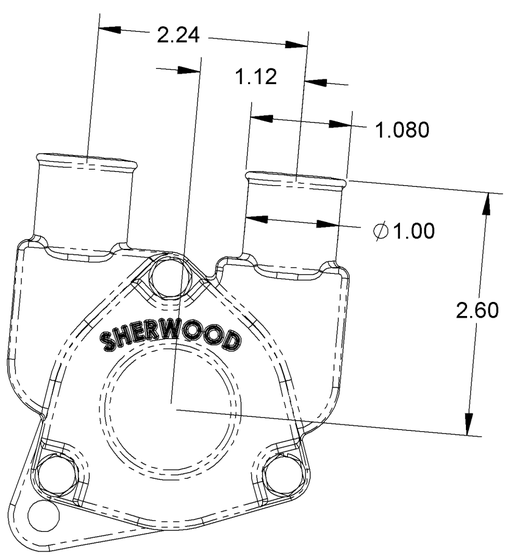

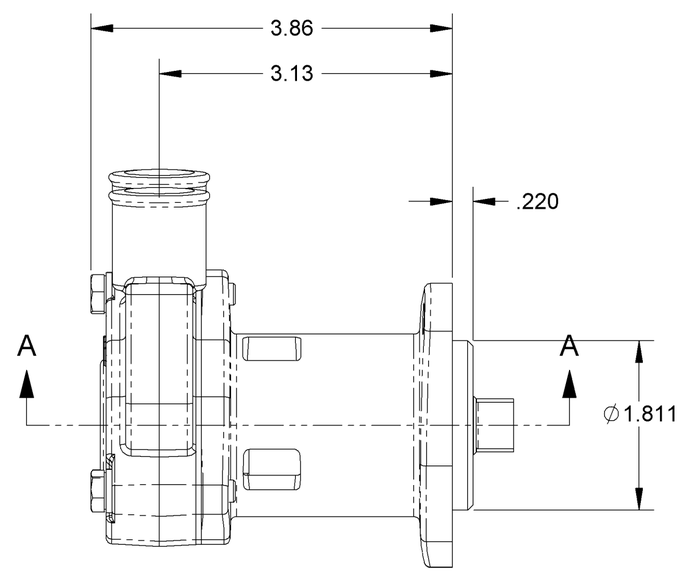

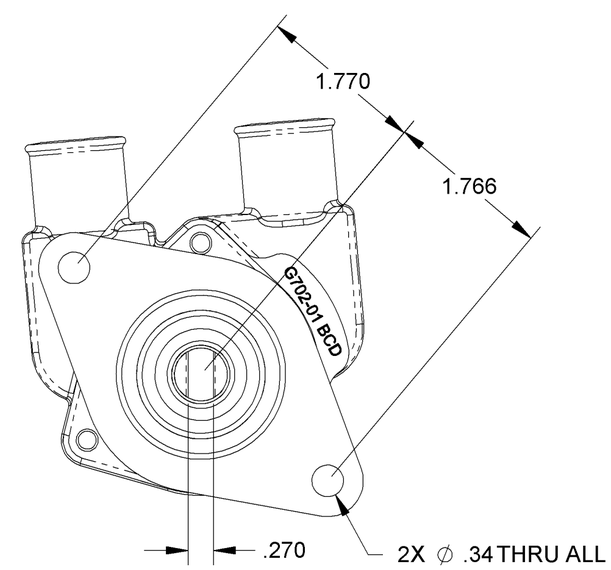

REV.	ECN	REVISION DESCRIPTION	CHKD	DATE
A	4789	RELEASED	PB	5/16/05

FORM FM-EN-030 REV___

SHERWOOD
A Div. of Hypro Corporation A WICOR COMPANY
375 Fifth Avenue NW, New Brighton, MN 55112, (651) 766-6300

DRAWING BASED ON ASME Y14.5M-1994 | DO NOT SCALE PRINT

THIRD ANGLE PROJECTION | SCALE

PART DESCRIPTION: RUBBER IMPELLER PUMP

EXPERIMENTAL PART NO.: EX7194-MA1 REV. 1
ENGRG REL: DATE:
DWG BY: PBEAR DATE: 03/07/05
CHECKED BY: DATE:

THIS DRAWING IS THE PROPERTY OF HYPRO AND WITHOUT WRITTEN AUTHORIZATION, MUST NOT BE COPIED OR COMMUNICATED.

PART NUMBER: G702 REV. A