G30-2B

PARTS LIST

ITEM	PART NO.	DESCRIPTION	REQ'D
1	12303	HOUSING	1
2	12231	O-RING	1
3	10515	SCREW	1
4	10627	CAM	1
5	4432	DRIVE KEY	1
6	9959	IMPELLER	1
7	4258	RET. RING	3
8	12314	MECH SEAL	1
9	12256	SEAL SEAT	1
10	4264	THRUST WASHER	1
11	12856	END PLATE	1
12	19784	BODY	1
13	12857	CAP SCREW	3
14	12710	LOCK WASHER	3
15	4259	RET. RING	2
16	12612	SHAFT	1
17	12211	BALL BEARING	2
18	5133	SPACER BEARING	1
19	12615	HUB-PULLEY	1
20	12791	PIN	1
21	12855	GASKET	1
22	13285	TAG	1
23	17659	CARTON Y	1
24	12209	LABEL	1
25	14486	JIFFY BAG Nº 4	1

SERVICE ASS'Y NO.	COMPONENT ITEM NO'S
SEAL & SEAT ASS'Y NO. 12859	8 & 9

MAJOR REPAIR KIT # 12619

MINOR REPAIR KIT # 12399

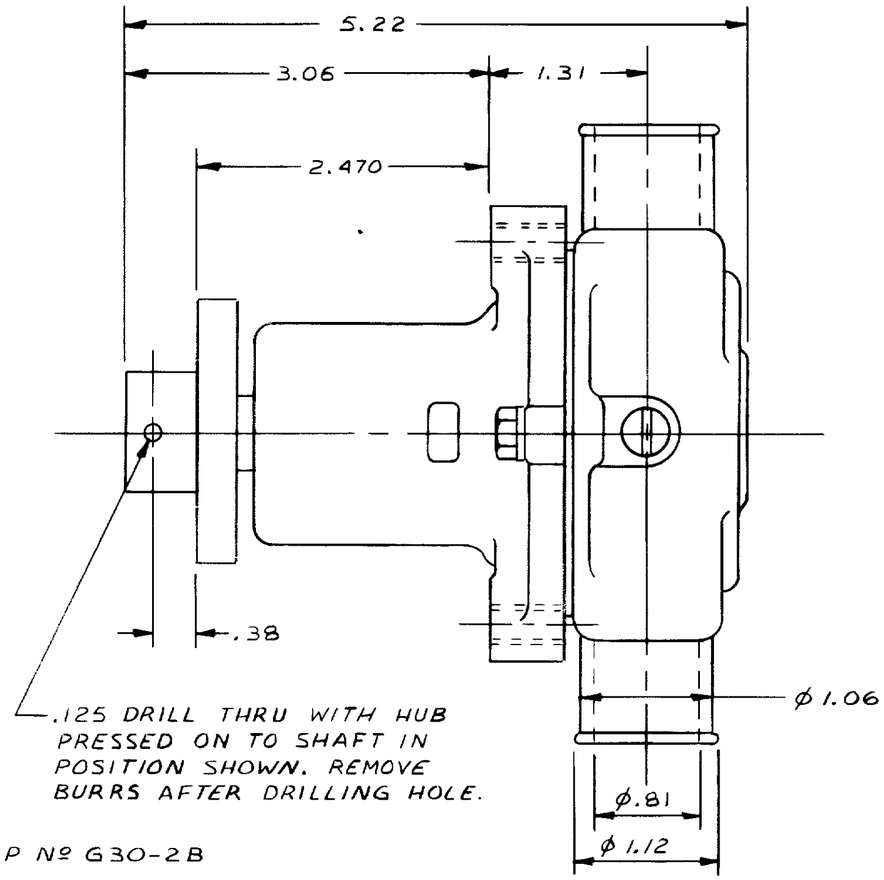

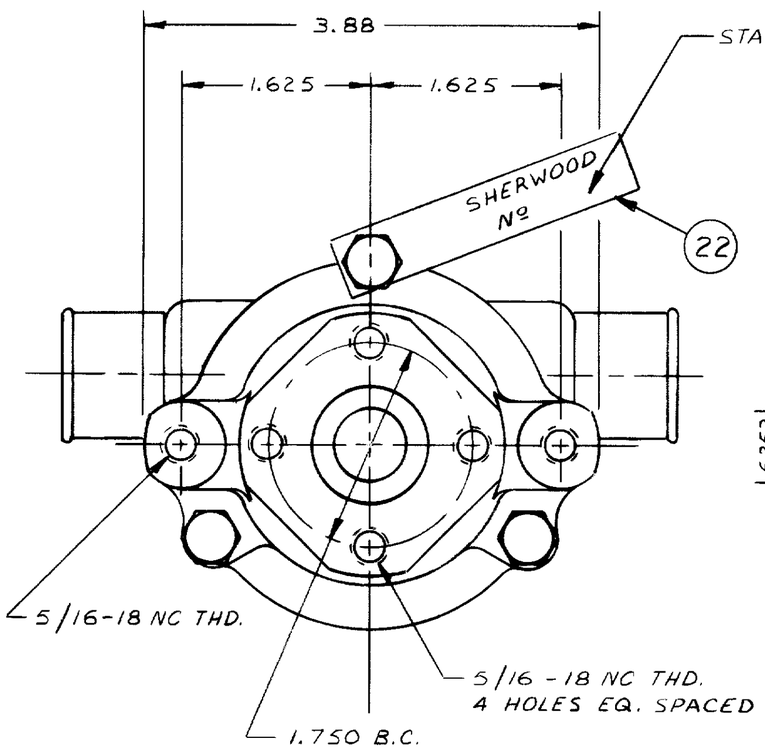

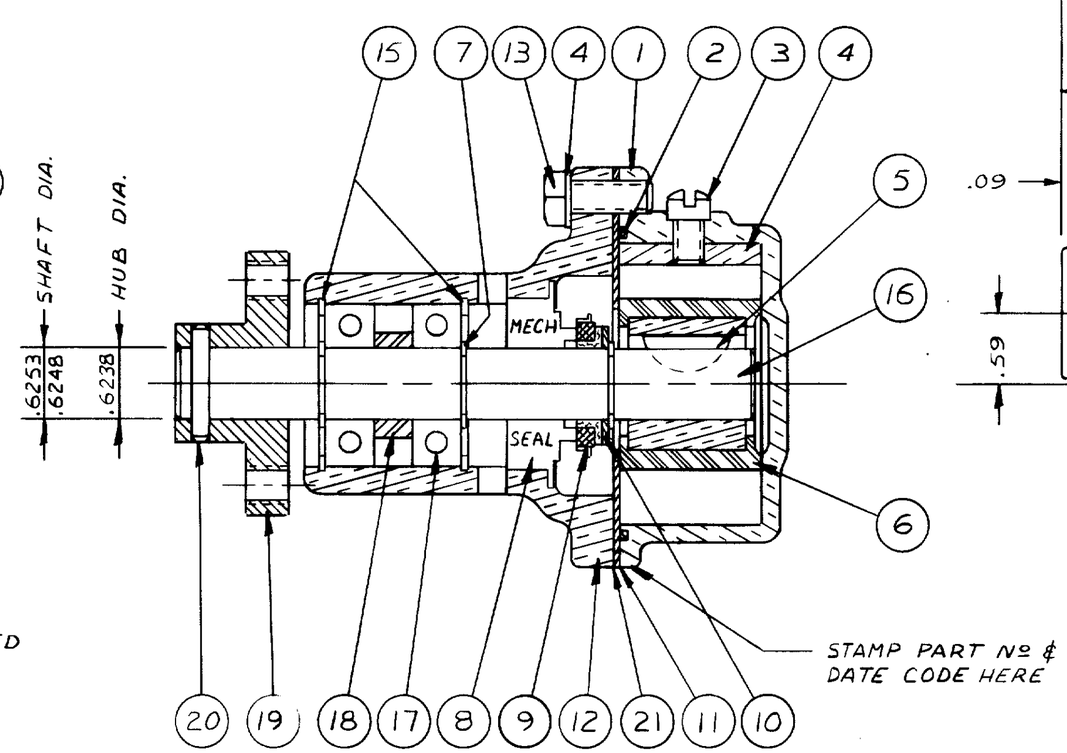

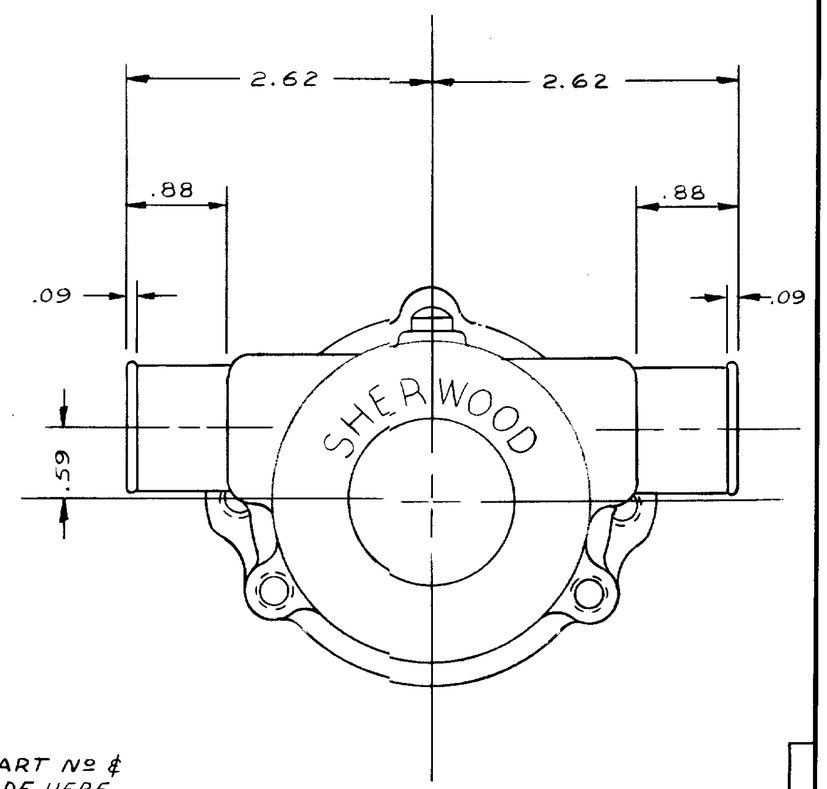

REV	DESCRIPTION	APPR	DATE

UNLESS OTHERWISE SPECIFIED
CAST DIMENSIONS ± .02
FILLETS & RADII .06
FINISH STOCK .07
MACHINING TOLERANCE, INCHES
XX ± .01, XXX ± .005
SURFACE ROUGHNESS √
ANGLES ± 0° 30'
CORNER BREAKS .01 MAX.

FLATNESS .0015 IN/IN
SQUARENESS .0015
CONCENTRICITY .002
ROUNDNESS .0005
RUNOUT .002

SHERWOOD
A DIVISION OF HYPRO CORPORATION
6331 E. JEFFERSON AVE. • DETROIT, MICHIGAN 48207

DRAFTSMAN	DATE	CHECKER	DATE	ASS'Y NO.
KB	5-1-92	TLG	5-19-92	

TITLE: RUBBER IMPELLER PUMP

MATERIAL: SEE DETAILS

DWG. NO. G30-2B

PROJ. NO.

GWYER BLUEPRINT CO. 550721