## 10-24707 pump F35B-9

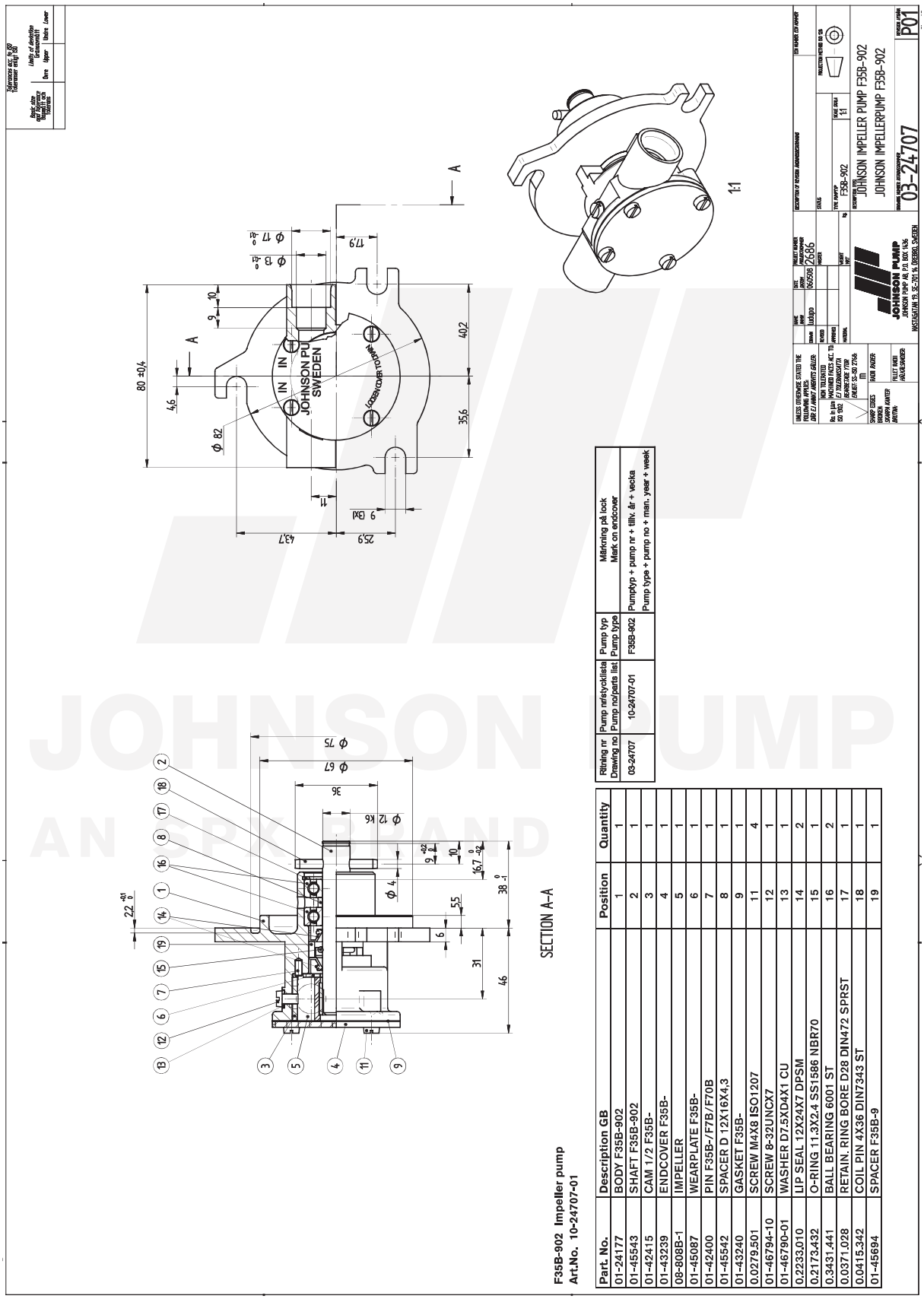


| Rätning nr Drawing no | Pump nr/stycklista Pump no/parts list | Pump typ Pump type | Märkning på lock Mark on endcover |
|---|---|---|---|
| 03-24707 | 10-24707-01 | F35B-902 | Pumptyp + pump nr + tillv. år + vecka<br>Pump type + pump no + man. year + week |

**F35B-902 Impeller pump**
**Art.No. 10-24707-01**

| Part. No. | Description GB | Position | Quantity |
|---|---|---|---|
| 01-24177 | BODY F35B-902 | 1 | 1 |
| 01-45543 | SHAFT F35B-902 | 2 | 1 |
| 01-42415 | CAM 1/2 F35B- | 3 | 1 |
| 01-43239 | ENDCOVER F35B- | 4 | 1 |
| 08-808B-1 | IMPELLER | 5 | 1 |
| 01-45087 | WEARPLATE F35B- | 6 | 1 |
| 01-42400 | PIN F35B-/F7B/F70B | 7 | 1 |
| 01-45542 | SPACER D 12X16X4,3 | 8 | 1 |
| 01-43240 | GASKET F35B- | 9 | 1 |
| 0.0279.501 | SCREW M4X8 ISO1207 | 11 | 4 |
| 01-46794-10 | SCREW 8-32UNCX7 | 12 | 1 |
| 01-46790-01 | WASHER D7.5XD4X1 CU | 13 | 1 |
| 0.2233.010 | LIP SEAL 12X24X7 DPSM | 14 | 2 |
| 0.2173.432 | O-RING 11.3X2.4 SS1586 NBR70 | 15 | 1 |
| 0.3431.441 | BALL BEARING 6001 ST | 16 | 2 |
| 0.0371.028 | RETAIN. RING BORE D28 DIN472 SPRST | 17 | 1 |
| 0.0415.342 | COIL PIN 4X36 DIN7343 ST | 18 | 1 |
| 01-45694 | SPACER F35B-9 | 19 | 1 |


The product, i.e. concept, design and construction, is the property of SPX Johnson Pump Marine AB