JOHNSON PUMP

article number 10-24017 pump F7B-9

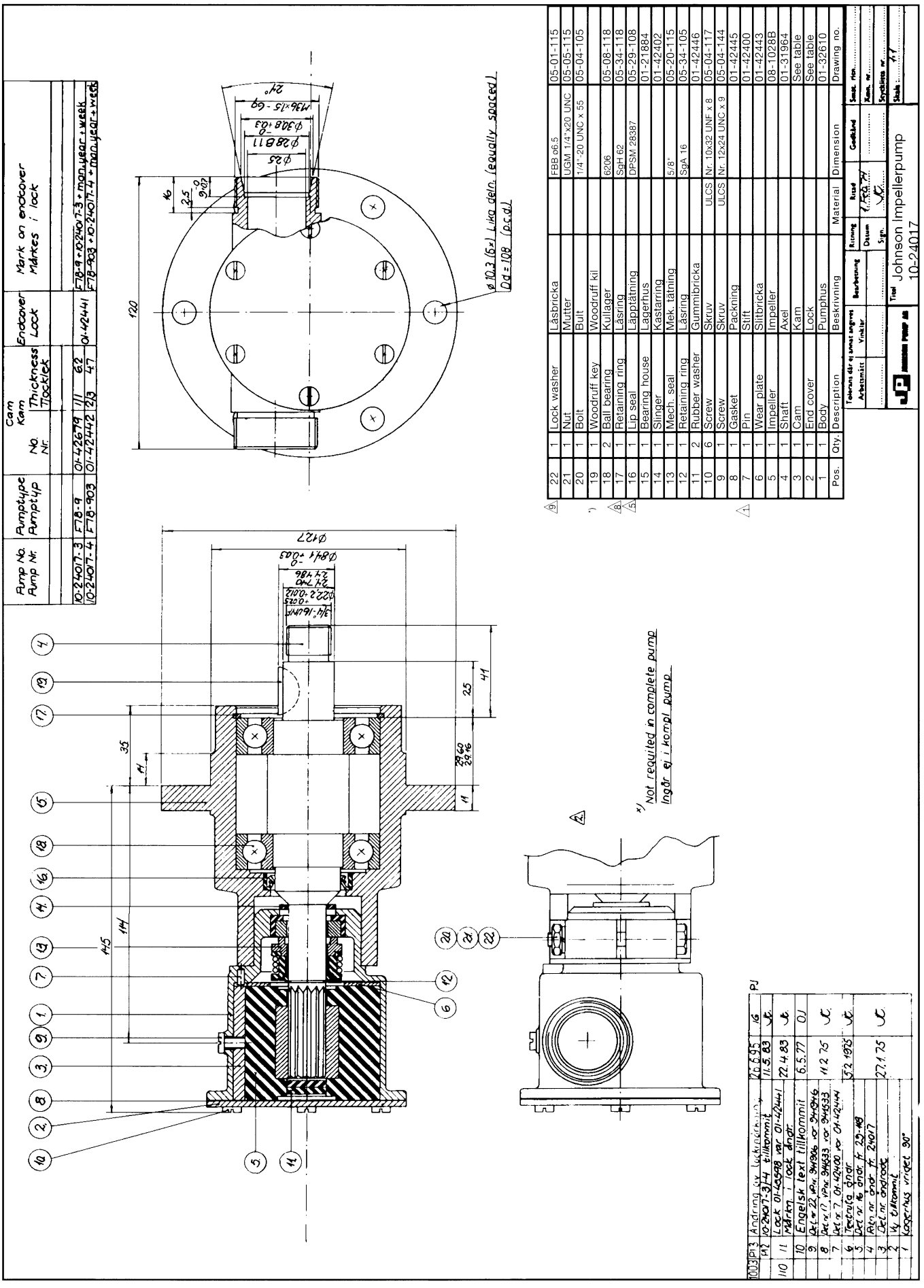

The product, i.e. concept, design and construction, is the property of Johnson Pump AB