For Your Convenience: This Westerbeke File Is Shared By Diesel Parts Direct

DIESEL PARTS DIRECT

YOUR ONE STOP SUPERSTORE FOR DIESEL ENGINE PARTS

SHOP NOW

PARTS LIST

WESTERBEKE 80, 120
Marine Diesel Engines

WESTERBEKE BR30, BR45
Marine Diesel Generators

Publication Number 15162

Issue Date June 1, 1977

Edition 4

WESTERBEKE

WESTERBEKE CORPORATION
MYLES STANDISH INDUSTRIAL PARK
150 JOHN HANCOCK ROAD, TAUNTON, MA 02780-7319

PARTS LIST

WESTERBEKE 80, 120
Marine Diesel Engines

WESTERBEKE BR30, BR45
Marine Diesel Generators

Publication Number 15162

Issue Date June 1, 1977

Edition 4

WESTERBEKE

WESTERBEKE CORPORATION
MYLES STANDISH INDUSTRIAL PARK
150 JOHN HANCOCK ROAD, TAUNTON, MA 02780-7319

NOTE

The Westerbeke policy is one of continuous improvement, and accordingly, the company reserves the right to alter specifications, weights and dimensions without prior notice.

In compiling this Parts List, every care has been taken, but specifications and details must not be regarded as binding.

Please, if you have a suggestion regarding this book, or feel there is an error, send a written note to the attention of Publications Department.

The unit of measure on linear commodities is the INCH (not feet or yards). The code in the quantity column "AR" indicates that quantity varies. Therefore, order amounts As Required.

The Westerbeke 80 and Westerbeke 120 engines are family members having a large majority of common parts. There also have been two series of this engine family, the earlier VD series and the current 98 series.

The series can be distinguished by the model number stamped into the cylinder block. The VD series is indicated by the numbers 38 or 57 appearing within the model number; the 98 series is indicated by the number 98 appearing within the model number.

The two series can be physically distinguished by inspection of the fresh water pump by-pass piping. See drawing opposite. Facing the front of the engine, the VD series by-pass hose is to the left of the pump, attaching to the lower thermostat housing from the left. The 98 series is just the opposite.

Where they would vary, quantities are indicated for the six cylinder engine.

COOLING BY-PASS ARRANGEMENT

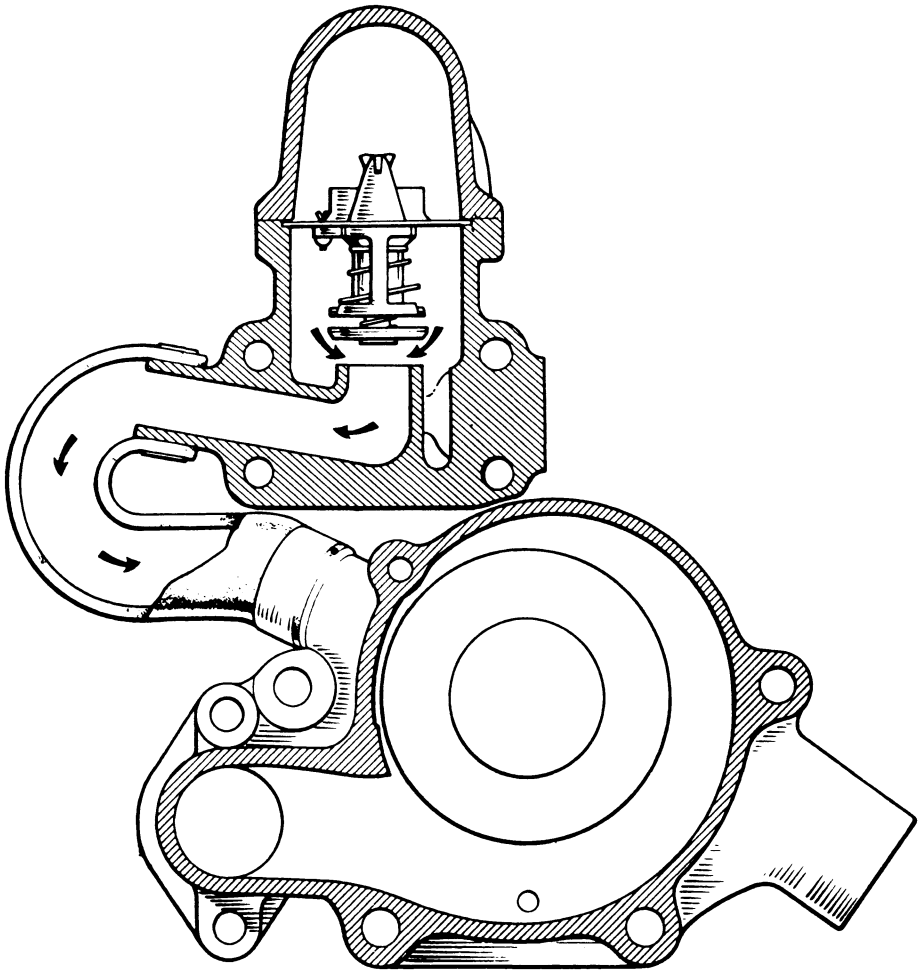

38VD AND 57VD SERIES (OLD)

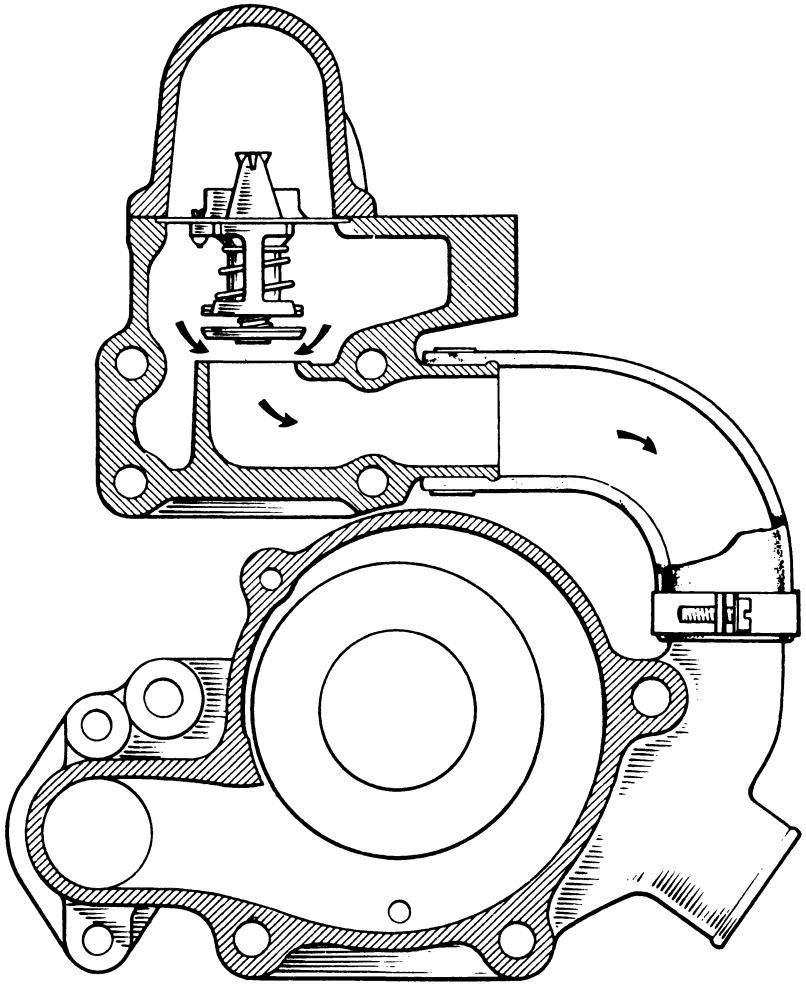

4/98 AND 6/98 SERIES (NEW)

PARTSLIST CONTENTS

W80 & W120:	CYLINDER BLOCK	201
W80 & W120:	CRANKSHAFT - ROD - PISTON	205
W80 & W120:	CAMSHAFT - TIMING GEARS	207
W80 & W120:	CYLINDER HEAD	209
W80 & W120:	ROCKER SHAFT - LOWER THERMOSTAT HOUSING	211
W80 & W120:	OIL SUMP	213
W80 & W120:	TIMING COVER	215
W80 & W120:	FRESH WATER PUMP	217
W80 & W120:	LUBE OIL PUMP	219
W80 & W120:	INTAKE MANIFOLD	221
W80 & W120:	FUEL SYSTEM	223
W80 & W120:	COOLING SYSTEM	227
W80 & W120:	BACK END ARRANGEMENT	231
W80 & W120:	ELECTRICAL SYSTEM - SINCE 1974	233
W80 & W120:	ELECTRICAL SYSTEM	235
W80 & W120:	MOUNTING SYSTEM	237
W60 (FROM APRIL 1974) W80 & W120:	SEA WATER PUMP	239
W80 & W120:	MISCELLANEOUS	241
30 & 45KW:	GENERATOR	243
30 & 45KW:	ENGINE CONTROL SYSTEM - MANUAL - SINCE APRIL 1977	245
30 & 45KW:	ENGINE CONTROL SYSTEM	247
30 & 45KW:	VOLTAGE REGULATOR & POWER CONNECTIONS	249
30 & 45KW:	MISCELLANEOUS PARTS	251

W8↗ & W120: CYLINDER BLOCK

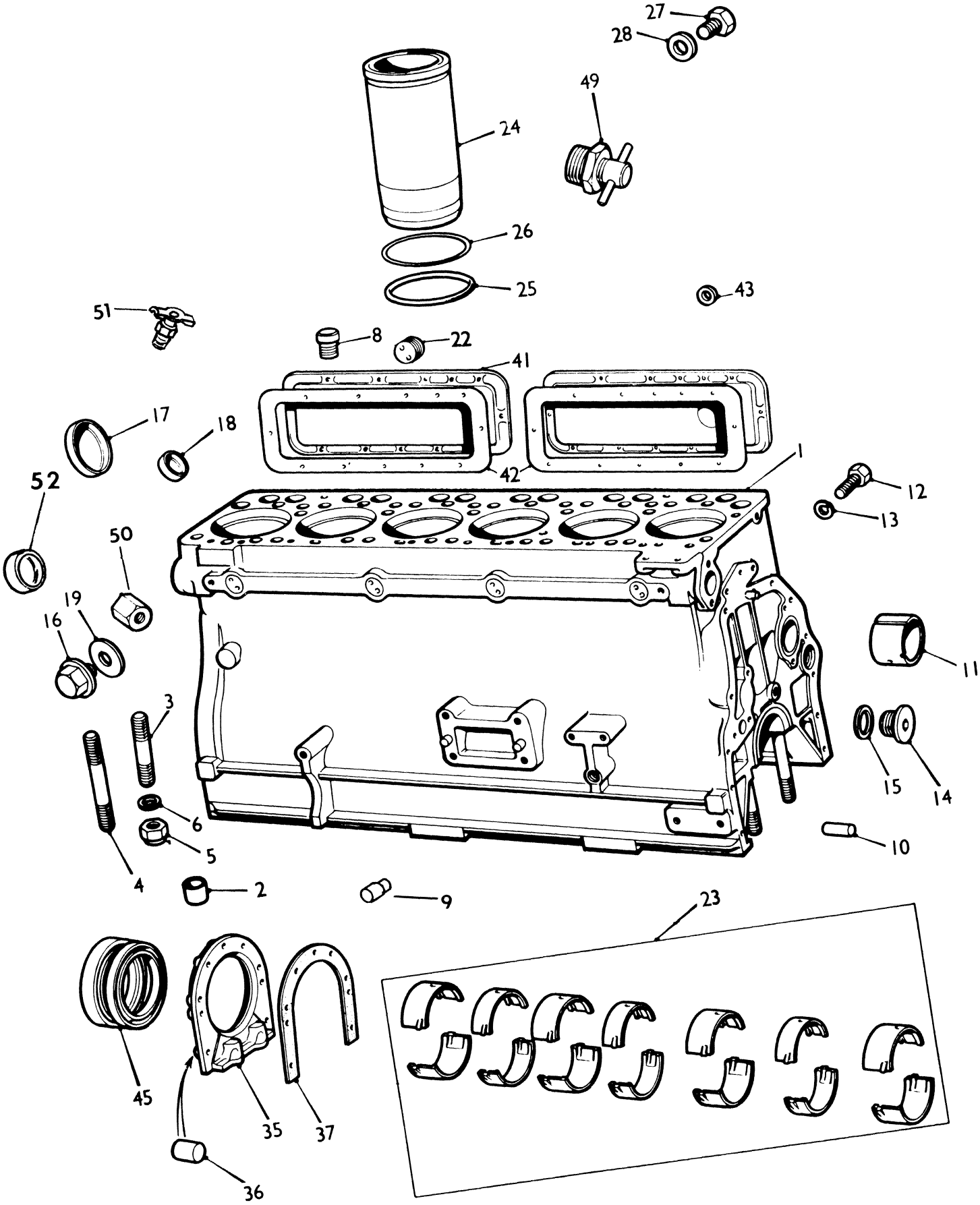

W80 & W120: CYLINDER BLOCK

REF	PN	NAME	REMARKS	QUAN
1-1	17872	BLOCK ASSY	57VD - CYLINDER	1
1-2	17866	BLOCK ASSY	38VD - CYLINDER	1
1-3	18101	BLOCK ASSY	W120 - CYLINDER	1
1-4	18087	BLOCK ASSY	W80 - CYLINDER	1
1-5	16391	ENGINE	W120 - FAN TO FLYWHEEL	1
1-6	16390	ENGINE	W80 - FAN TO FLYWHEEL	1
2	17806	DOWEL	OIL PUMP BODY TO MAIN BRNG CAP	2
3	17825	STUD	MAIN BEARING CAP - LONG	2
4	17826	STUD	MAIN BEARING CAP - SHORT	12
5	17923	NUT	MAIN BEARING STUD	14
6	17807	WASHER	CYLINDER BLOCK	14
8-1	17628	DOWEL	VD SERIES - CYLINDER BLOCK TO CYLINDER HEAD	2
8-2	18104	DOWEL	W80 & W120 - CYLINDER BLOCK TO CYLINDER HEA	2
9	17645	DOWEL	57VD - PUMP BRACKET TO CYL BLOCK	2
10	17640	DOWEL	TIMING CASE REAR HALF TO CYL BLOCK	3
11	18084	BUSHING	CAMSHAFT BEARING	1
12	17796	SCREW	BUSHING LOCATING - CAMSHAFT BEARING	1
13	18075	WASHER	SEALING	1
14	17793	PLUG	OIL GALLERY - CIRCULAR HEAD	2
15	17629	WASHER	PLUG - COPPER	2
16	17630	PLUG	OIL GALLERY - HEX HEAD	4
17	17938	CORE PLUG	WATER JACKET	1
18	17867	CORE PLUG	WATER JACKET	6
19	17620	WASHER		3
22	17585	CORE PLUG	WATER JACKET	3
23-1	17899	BEARING SET	W120 - MAIN - STANDARD	1
23-2	17903	BEARING SET	W80 - MAIN - STANDARD	1
23-3	17900	BEARING SET	W120 - MAIN - .015" U/S	1
23-4	17904	BEARING SET	W80 - MAIN - .015" U/S	1
24-1	17858	LINER	VD SERIES - CYLINDER	6
24-2	18088	LINER	W80 & W120 - CYLINDER	6
25-1	17848	RING	VD SERIES - SEALING - LINER - BOTTOM	6
25-2	18090	RING	W80 & W120 - SEALING - LINER - BOTTOM	6
26-1	17971	SHIM	VD SERIES - CYLINDER LINER - .003"	AR
26-2	17972	SHIM	VD SERIES - CYLINDER LINER - .004"	AR
26-3	17973	SHIM	VD SERIES - CYLINDER LINER - .005"	AR
26-4	18089	RING	W80 & W120 - SEALING - LINER - TOP	6
27	17986	PLUG	OIL DRAIN	1
28	17639	WASHER	FIBER	1
35-1	17827	HOUSING	OIL SEAL	1
35-2	14524	SCREW	OIL SEAL HOUSING TO CYL BLOCK - LONG	7
35-3	14522	SCREW	OIL SEAL HOUSING TO CYL BLOCK - SHORT	2
36	18065	ROLL PIN		2
37	17599	GASKET	OIL SEAL HOUSING TO CYL BLOCK	1

W80 & W120: CYLINDER BLOCK

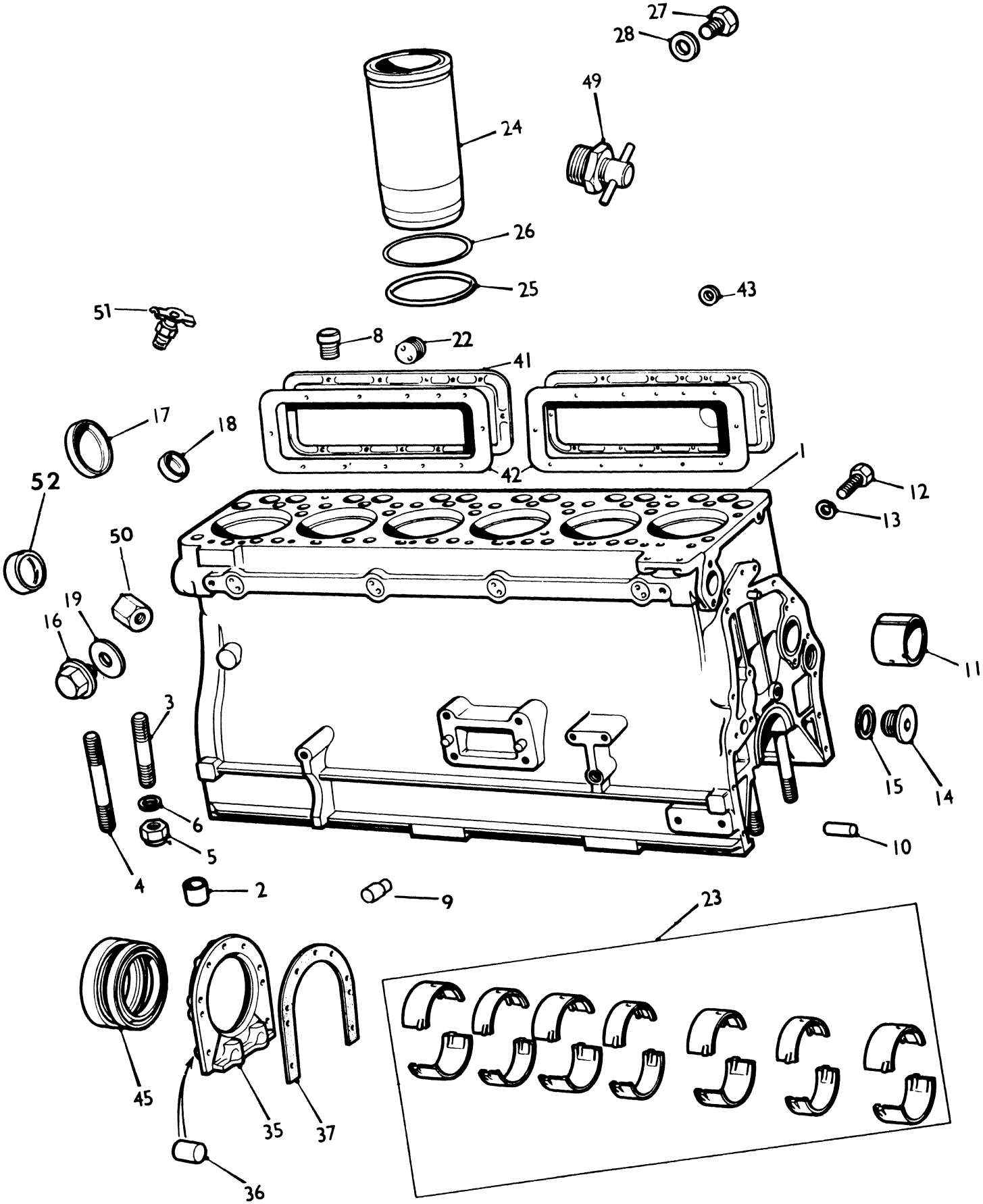

W80 & W120: CYLINDER BLOCK

REF	PN	NAME	REMARKS	QUAN
41-1	17789	COVER	W120 - CYLINDER SIDE	1
41-2	17857	COVER	W80 - CYLINDER SIDE	1
42-1	17813	GASKET	W120 - CYLINDER SIDE COVER	2
42-2	17814	GASKET	W80 - CYLINDER SIDE COVER	1
43	17997	WASHER	COPPER	22
45	17922	SEAL	LIP TYPE	1
49	17677	DRAINPLUG		1
50	18074	UNION	W120 - OIL GAUGE LINE	1
51	14152	PETCOCK	CYLINDER BLOCK DRAIN	1
52	19287	FREEZE PLUG	REAR CAMSHAFT BEARING	1

NOTE: BOTTOM SCRAPER RING MUST NOT BE INSTALLED ON ANY 98 SERIES ENGINE

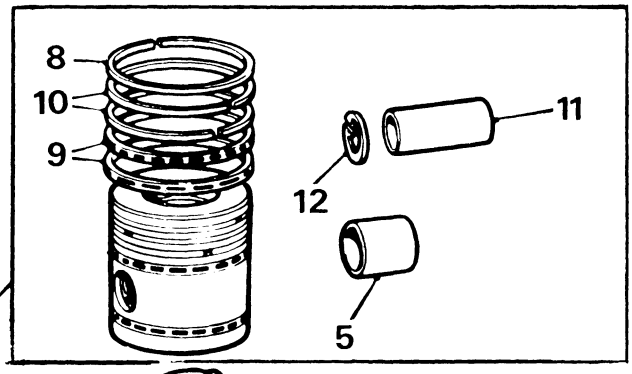

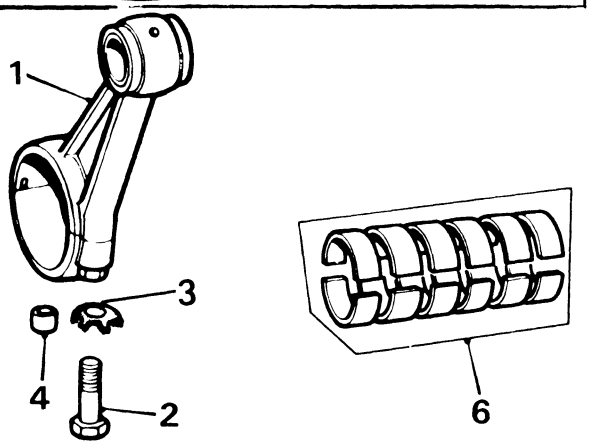

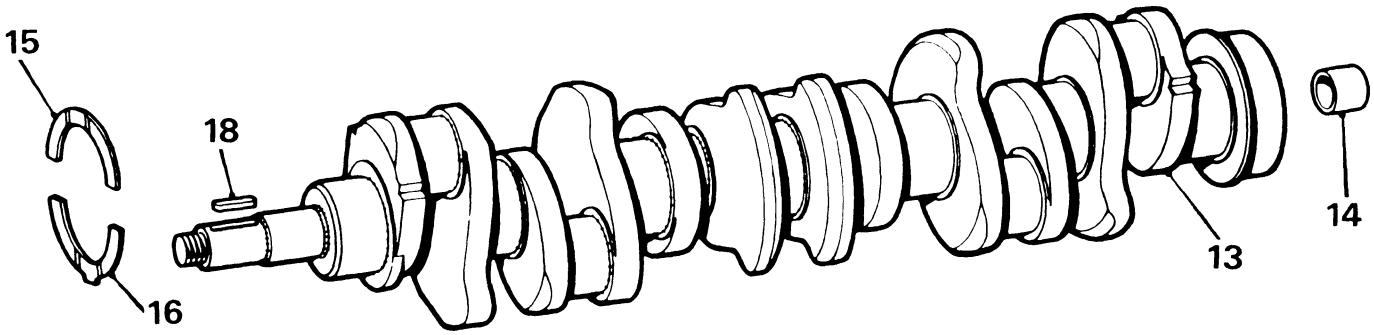

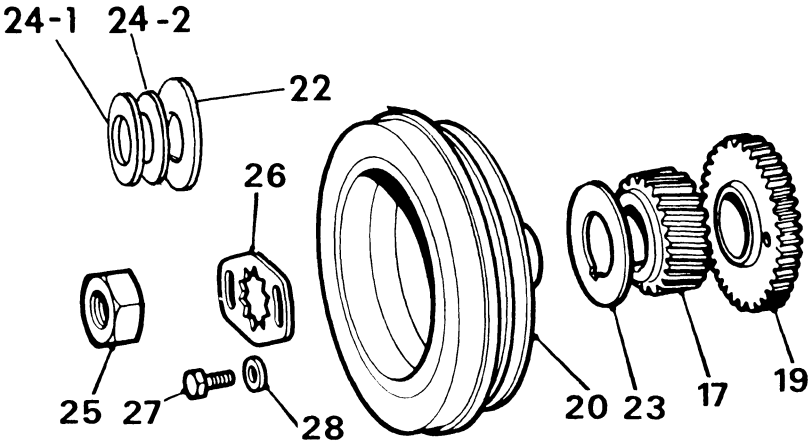

W80 & W120: CRANKSHAFT - ROD - PISTON

REF	PN	NAME	REMARKS	QUAN
1	18106	ROD ASSY	CONNECTING - VD & W80 & W120 SERIES	6
2	18108	BOLT	CONNECTING ROD	12
3	17588	TABWASHER	VD SERIES - CONNECTING ROD BOLT	12
4	17627	DOWEL	HOLLOW - CONNECTING ROD CAP	12
5	17859	BUSHING	PISTON PIN	6
6-1	17901	BEARING SET	W120 - CONNECTING ROD - STANDARD	1
6-2	17905	BEARING SET	W80 - CONNECTING ROD - STANDARD	1
6-3	17902	BEARING SET	W120 - CONNECTING ROD - .015" U/S	1
6-4	17906	BEARING SET	W80 - CONNECTING ROD - .015" U/S	1
7-1	17861	PISTON ASSY	VD SERIES - STANDARD	6
7-2	18096	PISTON ASSY	W80 & W120 - STANDARD	6
8-1	17779	RING	VD SERIES - COMPRESSION - STANDARD	6
8-2	18098	RING	W80 & W120 - COMPRESSION - STANDARD	6
9-1	17823	RING	VD SERIES - SCRAPER - STANDARD	12
9-2	18100	RING	W80 & W120 - SCRAPER - STANDARD	12
10-1	17782	RING	VD SERIES - TAPER FACED - STANDARD	12
10-2	18099	RING	W80 & W120 - TAPER FACED - STANDARD	12
11-1	17782	PIN	VD SERIES - PISTON	6
11-2	18097	PIN	W80 & W120 - PISTON	6
12	17761	CLIP	PISTON PIN	12
13-1	17830	CRANKSHAFT	57VD	1
13-2	17833	CRANKSHAFT	38VD	1
13-3	18103	CRANKSHAFT	W120	1
13-4	18095	CRANKSHAFT	W80	1
14	17612	BUSHING	CRANKSHAFT	1
15	17828	THRUSTWASHER	UPPER	2
16	17829	THRUSTWASHER	LOWER	2
17	17771	GEAR	CRANKSHAFT	1
18	17609	KEY	CRANKSHAFT GEAR	2
19	18077	GEAR	OIL PUMP DRIVING	1
21-1	17805	PULLEY	W120 - CRANKSHAFT	1
21-2	17842	PULLEY	W80 - CRANKSHAFT	1
22	17656	WASHER	CRANKSHAFT PULLEY	1
23	17654	SLINGER	OIL - CRANKSHAFT	1
24-1	17634	SHIM	CRANKSHAFT NUT - .010"	AR
24-2	17635	SHIM	CRANKSHAFT NUT - .015"	AR
25-1	17817	NUT	W120 - CRANKSHAFT PULLEY	1
25-2	17885	NUT	W80 - CRANKSHAFT PULLEY	1
26	17804	PLATE	LOCKING - CRANKSHAFT PULLEY	1
27	17636	BOLT	LOCKING PLATE TO PULLEY	2
28	17673	WASHER	PLAIN	2

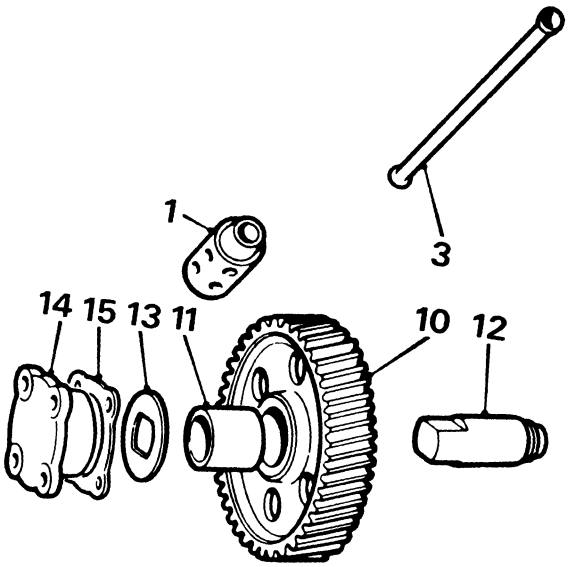
1
3
14
15
13
11
10
12

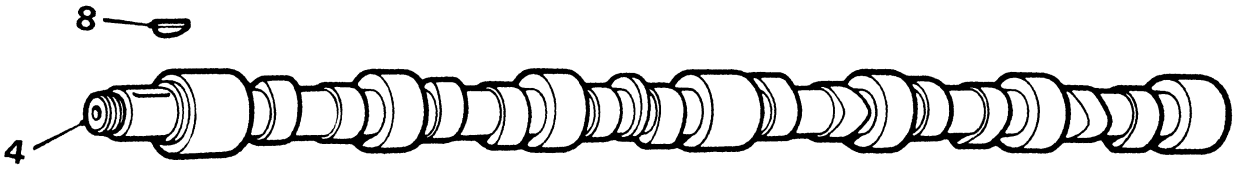
8
4

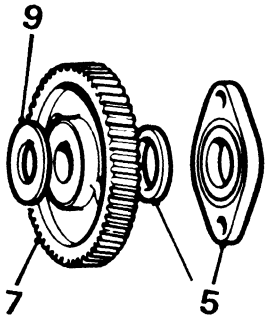
9
7
5

W80 & W120: CAMSHAFT - TIMING GEARS

REF	PN	NAME	REMARKS	QUAN
1	17595	TAPPET	VALVE	12
3	17668	PUSHROD		12
4-1	17831	CAMSHAFT	W120	1
4-2	17834	CAMSHAFT	W80	1
5	18085	PLATE ASSY	CAMSHAFT LOCATING	1
7	17832	GEAR	CAMSHAFT TIMING	1
8-1	18073	KEY	CAMSHAFT TIMING GEAR	1
8-2	17886	LOCKNUT	CAMSHAFT TIMING GEAR	1
9	17612	TABWASHER	CAMSHAFT TIMING GEAR	1
10	17772	GEAR	IDLER	1
11	17773	BUSHING	IDLER GEAR	1
12	17774	SHAFT	IDLER GEAR	1
13	17775	THRUSTWASHER	IDLER GEAR	1
14	17777	BEARING		1
15	17778	GASKET	BEARING	1

W80 & W120: CYLINDER HEAD

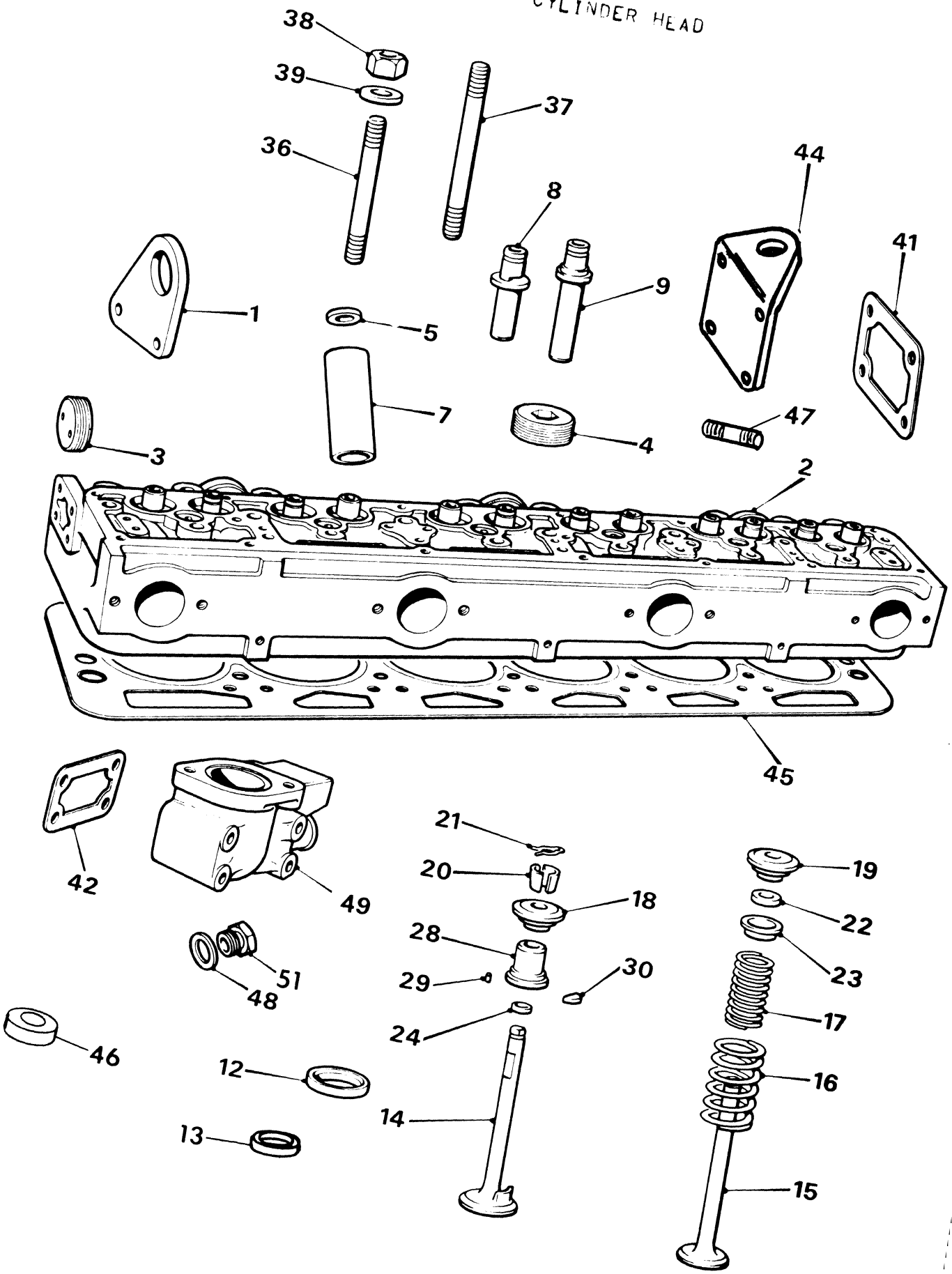

W80 & W120: CYLINDER HEAD

REF	PN	NAME	REMARKS	QUAN
1	13461	LIFTING EYE	FRONT END OF CYLINDER HEAD	1
2-1	17873	HEAD	57VD - CYLINDER	1
2-2	18034	HEAD	38VD - CYLINDER	1
2-3	18102	HEAD	W120 - CYLINDER	1
2-4	18091	HEAD	W80 - CYLINDER	1
3	14553	PLUG	CORE	4
4	17585	PLUG	CORE	7
5	18049	WASHER	INJECTOR SLEEVE	6
7-1	17853	SLEEVE	VD SERIES - INJECTOR	6
7-2	18107	SLEEVE	W80 & W120 - INJECTOR	6
8	18010	GUIDE	INLET VALVE	6
9	18011	GUIDE	EXHAUST VALVE	6
12-1	17594	INSERT	VD SERIES - VALVE SEAT - EXHAUST	AR
12-2	18094	INSERT	W80 & W120 - VALVE SEAT - EXHAUST	AR
13	17593	INSERT	VD SERIES - VALVE SEAT - INLET	AR
14-1	17658	VALVE	VD SERIES - INLET	6
14-2	18092	VALVE	W80 & W120 - INLET	6
15-1	17597	VALVE	VD SERIES - EXHAUST	6
15-2	18093	VALVE	W80 & W120 - EXHAUST	6
16	17606	SPRING	VALVE - OUTER	12
17	17607	SPRING	VALVE - INNER	12
18	17663	COLLAR	INLET VALVE SPRING	6
19	17602	COLLAR	EXHAUST VALVE SPRING	6
20	17603	COTTER	VALVE - COMPLETE	12
21	14514	CLIP	COLLAR - RETAINING	12
22	17605	SEAL	OIL - EXHAUST VALVE	6
23	17604	RETAINER	EXHAUST VALVE OIL SEAL	6
24	17659	SEAL	OIL - INLET VALVE	6
28	17821	THIMBLE	INLET VALVE	6
29	17822	DOWEL	THIMBLE LOCATING	6
30	17820	KEY	INLET VALVE	6
36-1	17669	STUD	VALVE ROCKER TO CYLINDER HEAD	4
36-2	18032	STUD	CYLINDER HEAD - SHORT	10
37	18031	STUD	CYLINDER HEAD - LONG	13
38	17672	NUT	CYLINDER HEAD STUD	23
39	17849	WASHER	CYLINDER HEAD STUD	23
41	17598	GASKET	REAR COVER PLATE	1
42	17869	GASKET	LOWER THERMOSTAT HOUSING	2
44	13730	LIFTING EYE	REAR END OF CYLINDER HEAD	1
45-1	18029	GASKET	W120 - CYLINDER HEAD	1
45-2	18030	GASKET	W80 - CYLINDER HEAD	1
46	17797	SPACER	EXHAUST MANIFOLD STUD	1
47	17879	STUD	REAR COVER PLATE	4
48	17765	WASHER	LOWER - THERMOSTAT HOUSING PLUG	1
49-1	17868	HOUSING	VD SERIES - LOWER - THERMOSTAT	1
49-2	18081	HOUSING	W80 & W120 - LOWER - THERMOSTAT	1
51	18024	PLUG	LOWER THERMOSTAT HOUSING	1

W80 & W120: ROCKER SHAFT - LOWER THERMOSTAT HOUSING

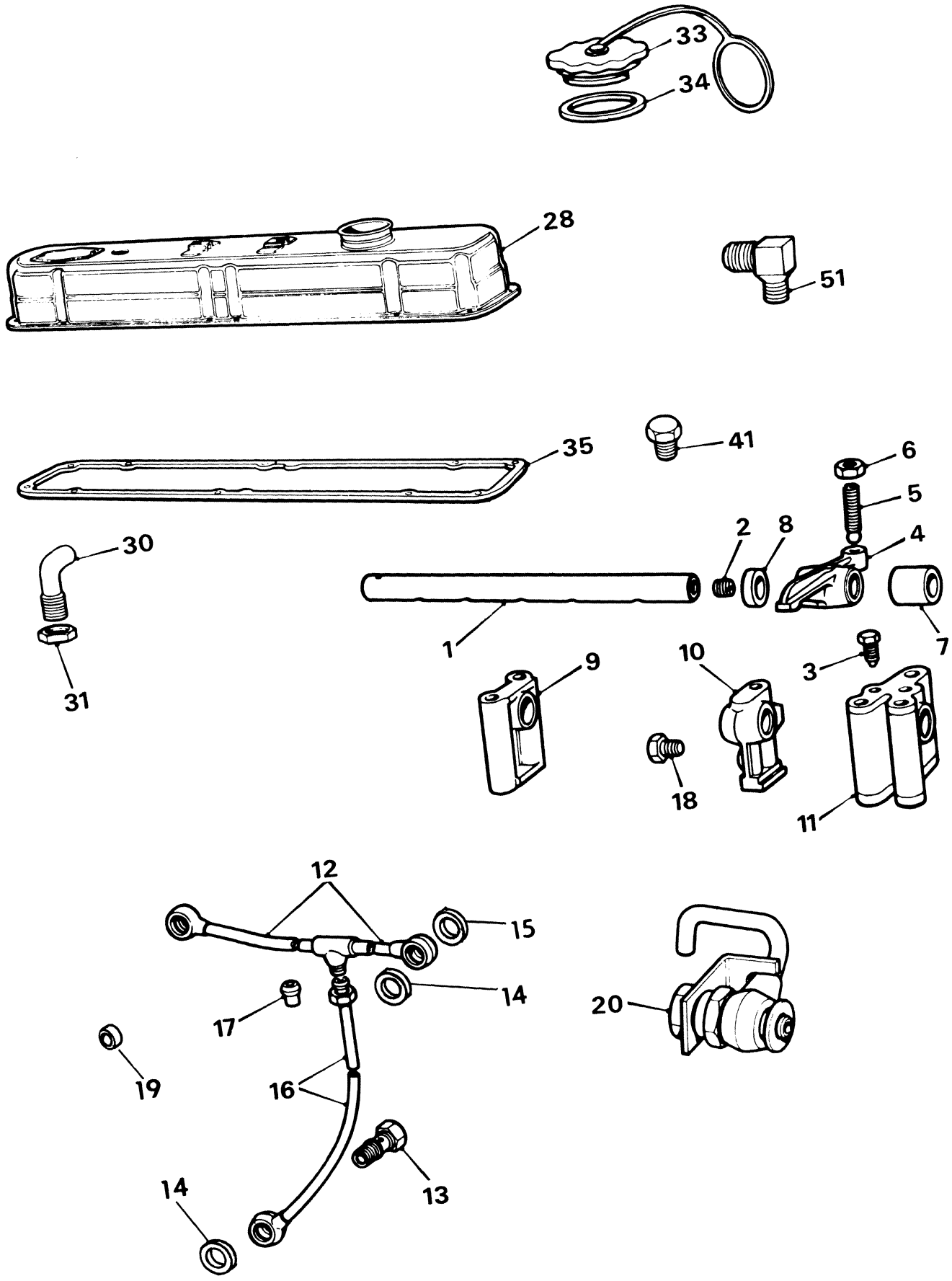

W80 & W120: ROCKER SHAFT - LOWER THERMOSTAT HOUSING

REF	PN	NAME	REMARKS	QUAN
1	17860	SHAFT	ROCKER	3
2	17601	PLUG	ROCKER SHAFT	3
3	17600	SCREW	SHAFT LOCATING	3
4	17664	ROCKER		12
5	17586	SCREW	ADJUSTING	12
6	17633	LOCKNUT	ADJUSTING SCREW	12
7	17667	SPACER		6
8-1	17665	SPACER	W120 - 10 USED - W80 - 8 USED	10
8-2	17666	SPACER	W120 - 2 USED	2
9	17661	BRACKET	ROCKER SHAFT - FRONT AND REAR	2
10	17662	BRACKET	ROCKER SHAFT - INTERMEDIATE	2
11-1	17791	BRACKET	W120 - ROCKER SHAFT - CENTER	1
11-2	17663	BRACKET	W80 - ROCKER SHAFT - CENTER	1
12-1	17792	LINE	W120 - OIL FEED TO ROCKERS	1
12-2	17787	LINE	W80 - OIL FEED TO ROCKERS	1
13	17655	BOLT	BANJO - UPPER AND LOWER LINES	3
14	17620	WASHER	BANJO BOLT - OIL FEED LINES	3
15	17641	WASHER	BANJO BOLT - LARGE - OIL FEED LINE	2
16	17621	LINE	OIL FEED TO ROCKERS	1
17	17632	NIPPLE	OIL FEED TO ROCKERS	1
18	17630	PLUG	INTERMEDIATE BRACKET	1
19	17653	SPACER	OIL FEED LINE	2
20	17623	VALVE ASSY	RELIEF	1
28-1	17855	COVER	W120 - VALVE	1
28-2	17854	COVER	W80 - VALVE	1
28-3	13446	TUBE	BREATHER - COVER TO SILENCER	1
30	17851	LINE	VENT	1
31	17681	NUT	VENT LINE	1
33	14515	CAP ASSY	OIL FILL	1
34	14516	GASKET	OIL FILL CAP	1
35-1	17794	GASKET	W120 - VALVE COVER	1
35-2	17795	GASKET	W80 - VALVE COVER	1
41	17952	PLUG	CYLINDER HEAD	1
51	17951	ELBOW	OVERFLOW LINE TO WATER OUTLET	1
52	15560	FITTING	OIL LINE TEE - REPAIR ONLY	AR

W80 & W120: OIL SUMP

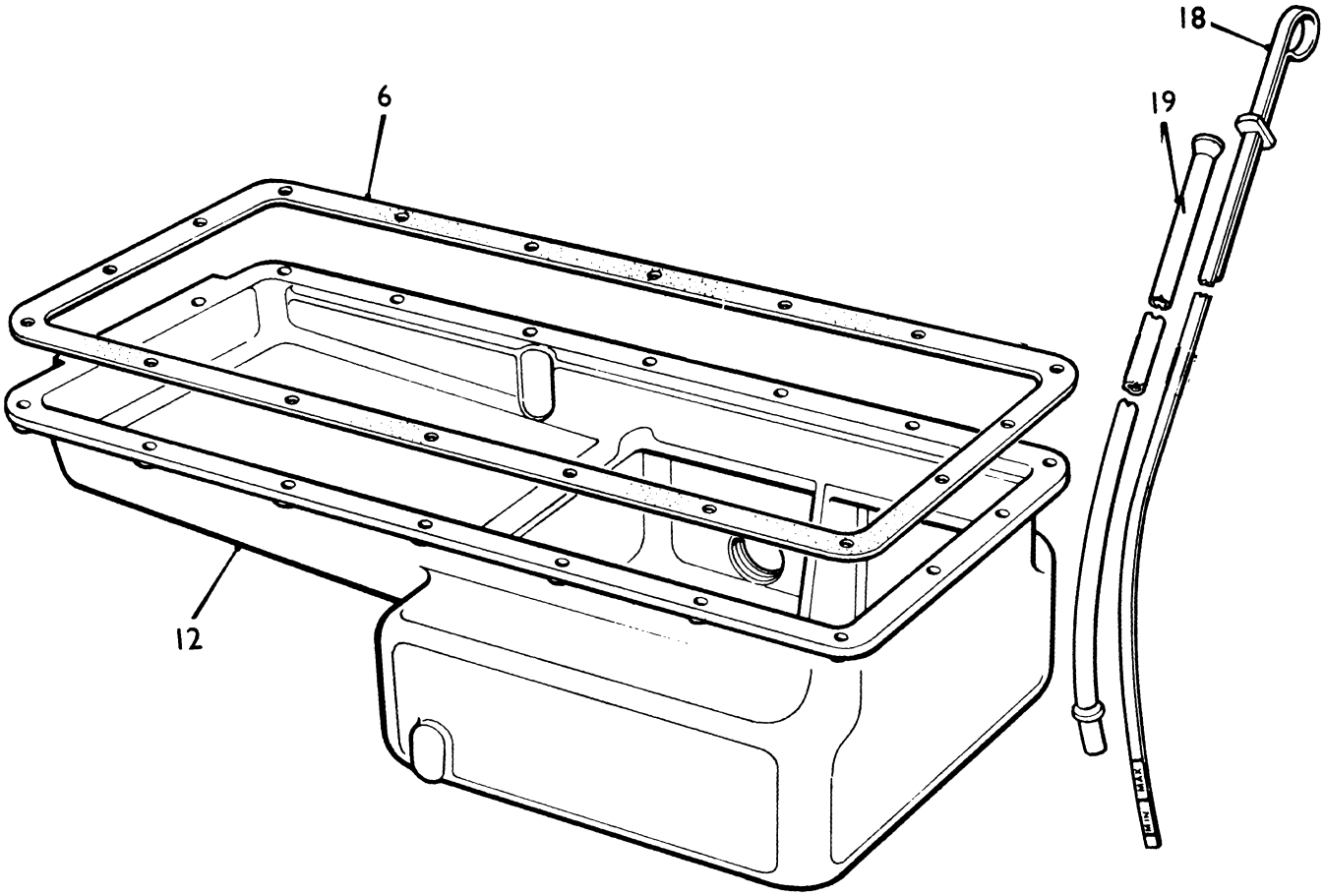

W80 & W120: OIL SUMP

REF	PN	NAME	REMARKS	QUAN
6-1	17815	GASKET	W120 - SUMP	1
6-2	17816	GASKET	W80 - SUMP	1
12-1	18026	SUMP	W120 - OIL	1
12-2	17618	SUMP	W80 - OIL	1
18	14000	DIPSTICK	W80 & W120 - OIL	1
19	12274	TUBE	DIPSTICK	1

W80 & W120: TIMING COVER

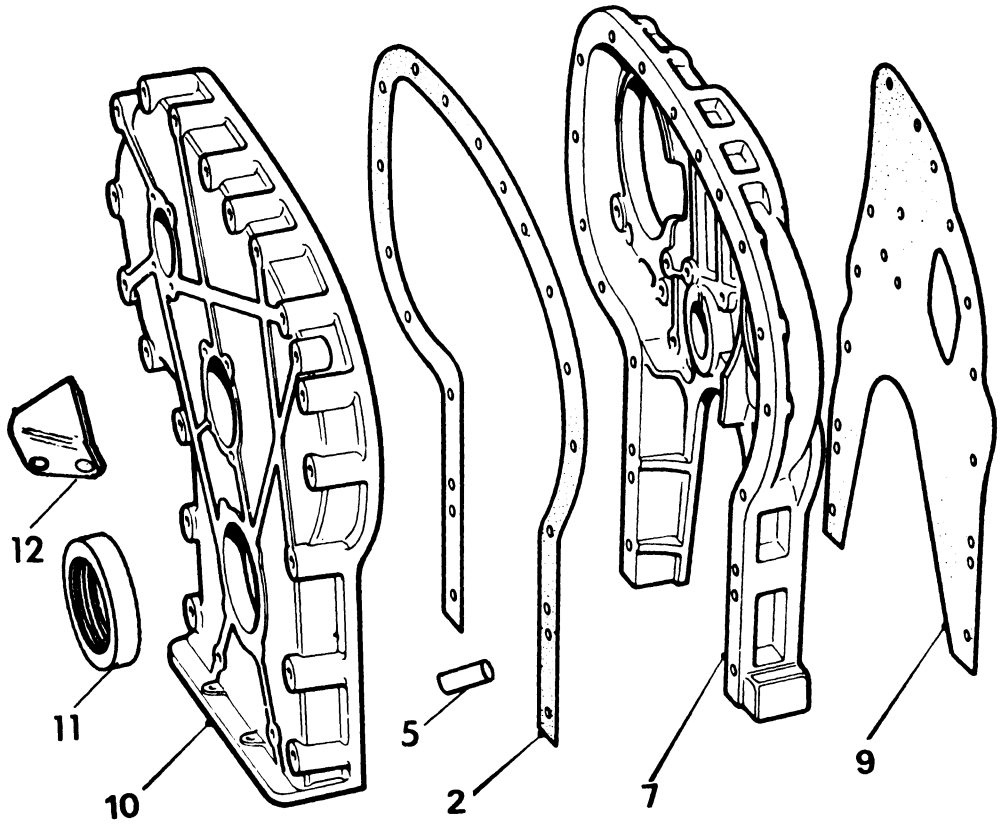

W80 & W120: TIMING COVER

REF	PN	NAME	REMARKS	QUAN
2	17619	GASKET	TIMING COVER	1
5	17642	DOWEL	TIMING CASE TO COVER	2
7	17768	COVER	TIMING - REAR HALF	1
9	17767	GASKET	COVER TO CYLINDER BLOCK	1
10	17769	COVER	TIMING - FRONT HALF	1
11	18079	SEAL	OIL - FRONT	1
12-1	13467	INDICATOR	TIMING - W120	1
12-2	22243	INDICATOR	TIMING - W80	1

W80 & W120: FRESH WATER PUMP

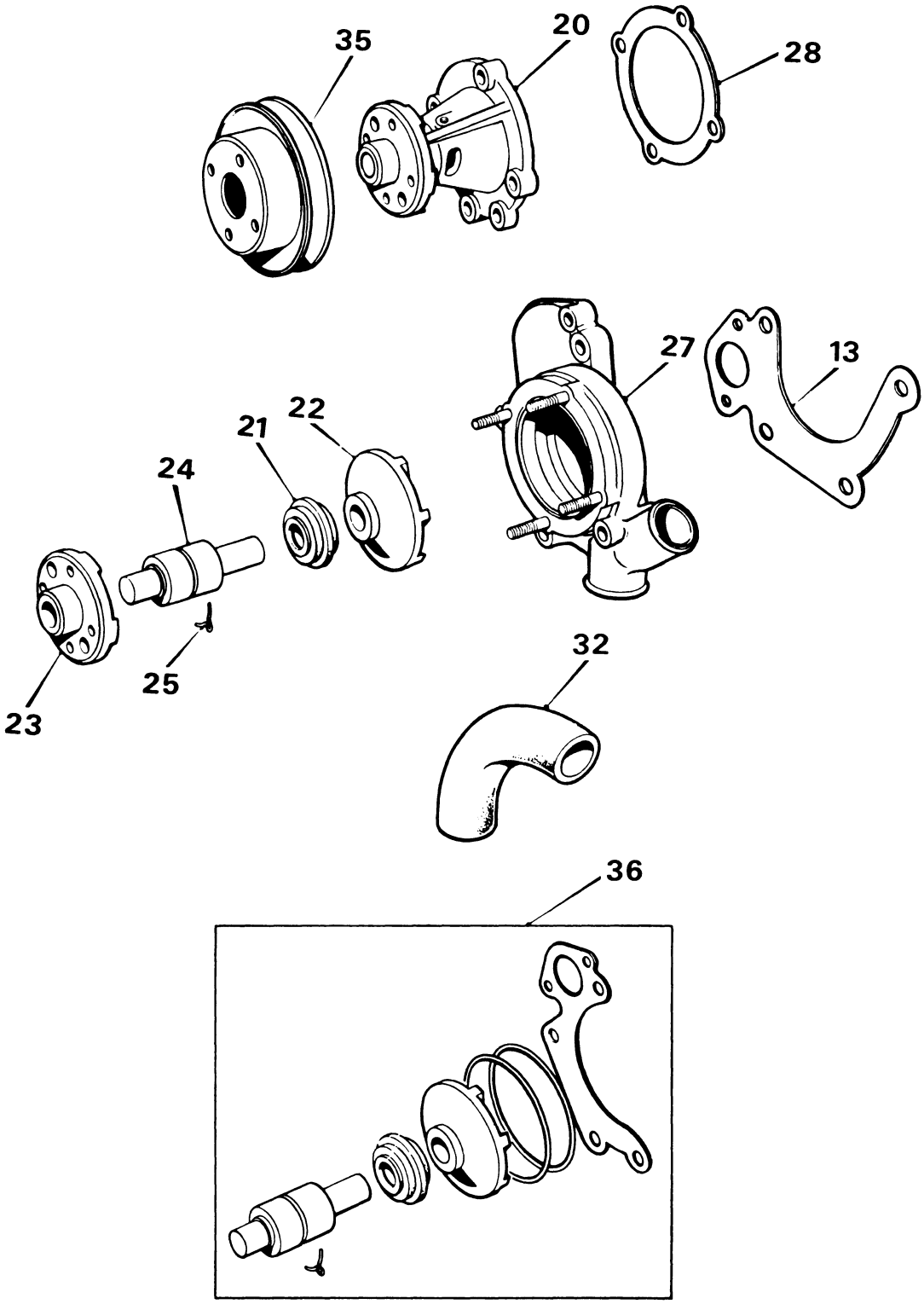

W80 & W120: FRESH WATER PUMP

REF	PN	NAME	REMARKS	QUAN
13	17781	GASKET	ADAPTER TO CYLINDER BLOCK	1
20	17798	PUMP ASSY		1
21	15463	SEAL	WATER PUMP	1
22	17799	IMPELLER	WATER PUMP	1
23	17800	HUB	WATER PUMP	1
24	17592	BEARING	WATER PUMP	1
25	15313	CLIP	BEARING LOCATING	1
27-1	17870	BODY ASSY	VD SERIES - REAR HALF	1
27-2	18083	BODY ASSY	W80 & W120 - REAR HALF	1
27-3	17881	STUD	WATER PUMP ADAPTER	4
28	17824	GASKET	PUMP TO ADAPTER	1
32-1	17871	HOSE	VD SERIES - BYPASS	1
32-2	18082	HOSE	W80 & W120 - BYPASS	1
35	17788	PULLEY	FAN - WATER PUMP	1
36	17898	KIT	REBUILD	1

W80 & W120: LUBE OIL PUMP

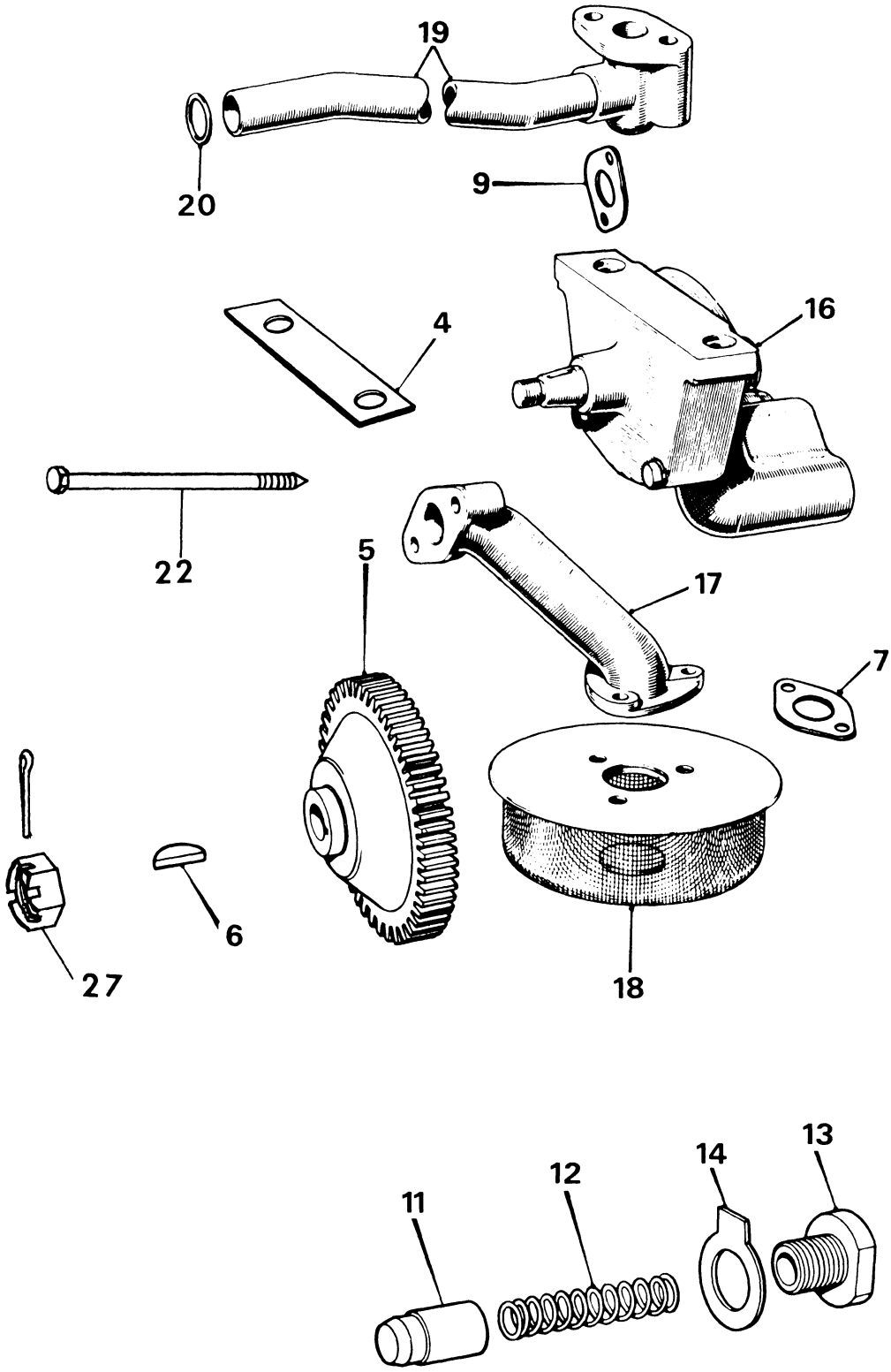

W80 & W120: LUBE OIL PUMP

REF	PN	NAME	REMARKS	QUAN
4-1	17811	SHIM	.002"	AR
4-2	17812	SHIM	.003"	AR
5	18076	GEAR	DRIVEN - OIL PUMP	1
6	18070	KEY	GEAR	1
7	17611	GASKET	SUCTION LINE TO PUMP	1
9	17617	GASKET	ELBOW - OIL DELIVERY LINE	1
11	17843	VALVE	RELIEF	1
12	17844	SPRING	RELIEF VALVE	1
13	17809	PLUG	SPRING	1
14	17810	WASHER	PLUG	1
16	17937	PUMP ASSY	OIL	1
17-1	17839	PIPE	57VD - W120 - OIL SUCTION	1
17-2	17845	PIPE	38VD - W80 - OIL SUCTION - WITH STEEL SUMP	1
18-1	17841	STRAINER	VD SERIES - OIL	1
18-2	18105	STRAINER	W80 & W120 - OIL	1
19-1	17840	LINE	W120 - OIL DELIVERY	1
19-2	17846	LINE	W80 - OIL DELIVERY	1
21	18067	O RING	DELIVERY LINE	1
22-1	17946	BOLT	CENTER	1
22-2	18063	WASHER	CENTER BOLT	1
27	17884	NUT	OIL PUMP SHAFT	1

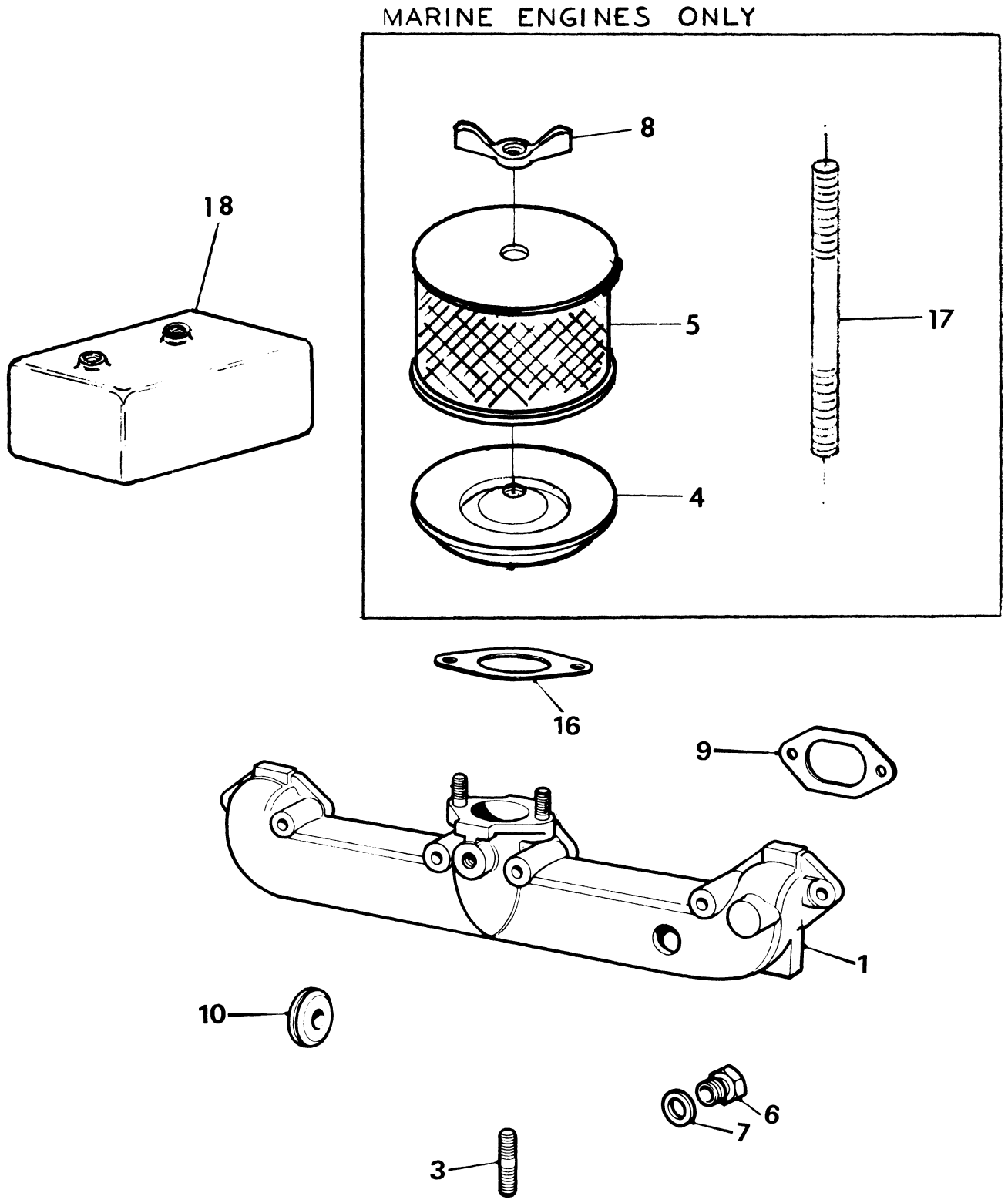
MARINE ENGINES ONLY
8
18
5
17
4
16
9
1
10
6
7
3

W80 & W120: INTAKE MANIFOLD

REF	PN	NAME	REMARKS	QUAN
1-1	17790	MANIFOLD	W120 - INTAKE	1
1-2	17624	MANIFOLD	W80 - INTAKE	1
1-3	17882	STUD	AIR INTAKE	2
3	17644	STUD	AIR INTAKE TO MANIFOLD	2
4	16505	ADAPTER	AIR INLET FILTER TO MANIFOLD	1
5	17266	FILTER	AIR INLET	1
6	17864	PLUG	MANIFOLD	1
7	17865	WASHER	PLUG	1
8	16680	WINGNUT	AIR INLET FILTER	1
9	17616	GASKET	INTAKE MANIFOLD TO HEAD	3
10	17835	GROMMET	SEALING	1
16	17657	GASKET	AIR INTAKE TO MANIFOLD	1
17	19008	STUD	AIR FILTER SUPPORT ROD	1
18	15236	SILENCER	AIR INTAKE	1

W80 & W120: FUEL SYSTEM

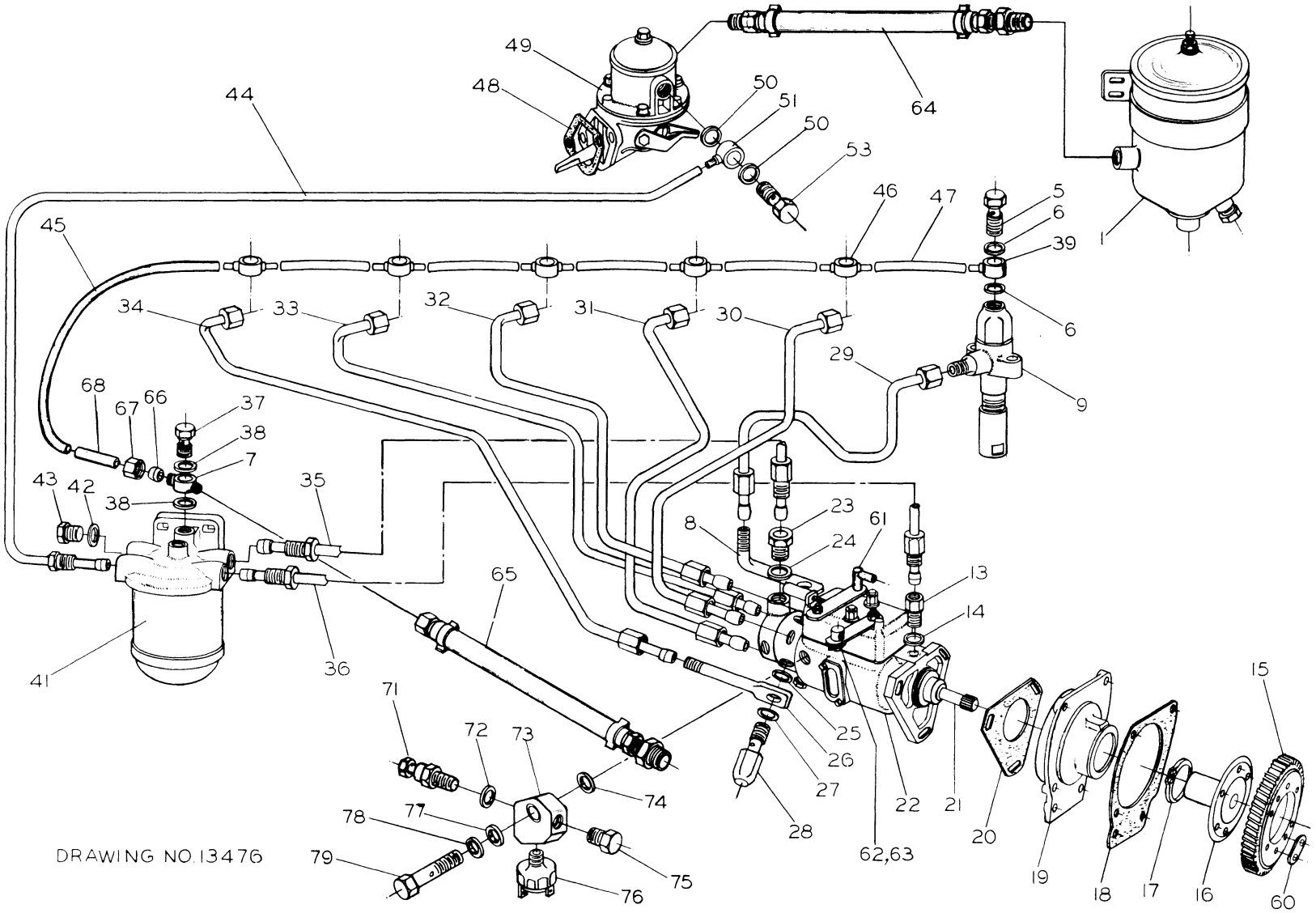

DRAWING NO. 13476

W80 & W120: FUEL SYSTEM

REF	PN	NAME	REMARKS	QUAN
1-1	11598	FILTER	PRIMARY - W80	1
1-2	20746	FILTER	PRIMARY - W120 - COMPLETE	1
5	17707	BOLT	BANJO - INJECTOR	5
6	11943	WASHER	BANJO BOLT	13
7	11936	BANJO	DOUBLE CONN - FUEL FILTER TOP	1
9	17956	INJECTOR		6
10	11597	FERRULE		1
11	11596	NUT		1
15	17776	GEAR	TIMING	1
16-1	17838	HUB	W120 - GEAR	1
16-2	17836	HUB	W80 - GEAR	1
17-1	17762	CIRCLIP	INTERNAL	1
17-2	17758	CIRCLIP	EXTERNAL	1
17-3	15429	CIRCLIP	HUB - INTERNAL	1
18	17674	GASKET	HOUSING TO TIMING CASE	1
19-1	18016	HOUSING	BEARING	1
19-2	17880	STUD	BEARING HOUSING	3
19-3	17643	BEARING	FUEL PUMP DRIVE	2
19-4	17837	SPACER	W80 - BEARING	1
20	12402	GASKET	PUMP TO HOUSING	1
22-1	17948	PUMP	57VD - INJECTION	1
22-2	17949	PUMP	38VD - INJECTION	1
22-3	17954	PUMP	W120 - INJECTION	1
22-4	17955	PUMP	W80 - INJECTION	1
29-1	18039	FUEL LINE	W120 - #1	1
29-2	18035	FUEL LINE	W80 - #1	1
30-1	18040	LINE	W120 - #2	1
30-2	18036	LINE	W80 - #2	1
31-1	18041	LINE	W120 - #3	1
31-2	18037	LINE	W80 - #3	1
32-1	18042	LINE	W120 - #4	1
32-2	18038	LINE	W80 - #4	1
33	18043	LINE	W120 - #5	1
34	18044	LINE	W120 - #6	1
35-1	18045	LINE	W120 - FUEL FILTER TO INJECTION PUMP INLET	1
35-2	18048	LINE	W80 - FUEL FILTER TO INJECTION PUMP INLET	1
36-1	18046	LINE	W120 - INJECTION PUMP OUTLET TO FUEL FILTER	1
36-2	18047	LINE	W80 - INJECTION PUMP OUTLET TO FUEL FILTER	1
37	14663	BOLT	BANJO - FUEL FILTER	1
38	18015	WASHER	BANJO BOLT - FUEL FILTER TOP	3
39	17646	BANJO	SINGLE CONNECTION - INJECTOR	1
41-1	19509	FILTER ASSY	FUEL - MOUNTED ON ENGINE	1
41-2	14776	ELEMENT	FUEL FILTER - W80	1
41-3	19397	ELEMENT	FUEL FILTER , W120	1
44-1	18025	LINE	W120 - FUEL - LIFT PUMP TO FILTER	1
44-2	18021	LINE	W80 - FUEL - LIFT PUMP TO FILTER	1
45	18023	LINE	INJECTOR TO FUEL FILTER	1
46	17783	BANJO	STRAIGHT THROUGH - INJECTOR	5
47-1	18022	LINE ASSY	W120 - INJECTOR RETURN	1
47-2	18013	LINE ASSY	W80 - INJECTOR RETURN	1
48	17856	GASKET	LIFT PUMP TO BLOCK	1
49-1	17933	PUMP	FUEL LIFT	1
49-2	14660	KIT	REBUILD - FUEL LIFT PUMP	AR

When ordering a pump please state if for marine engine or used on generator for proper setting and spring.

W80 & W120: FUEL SYSTEM

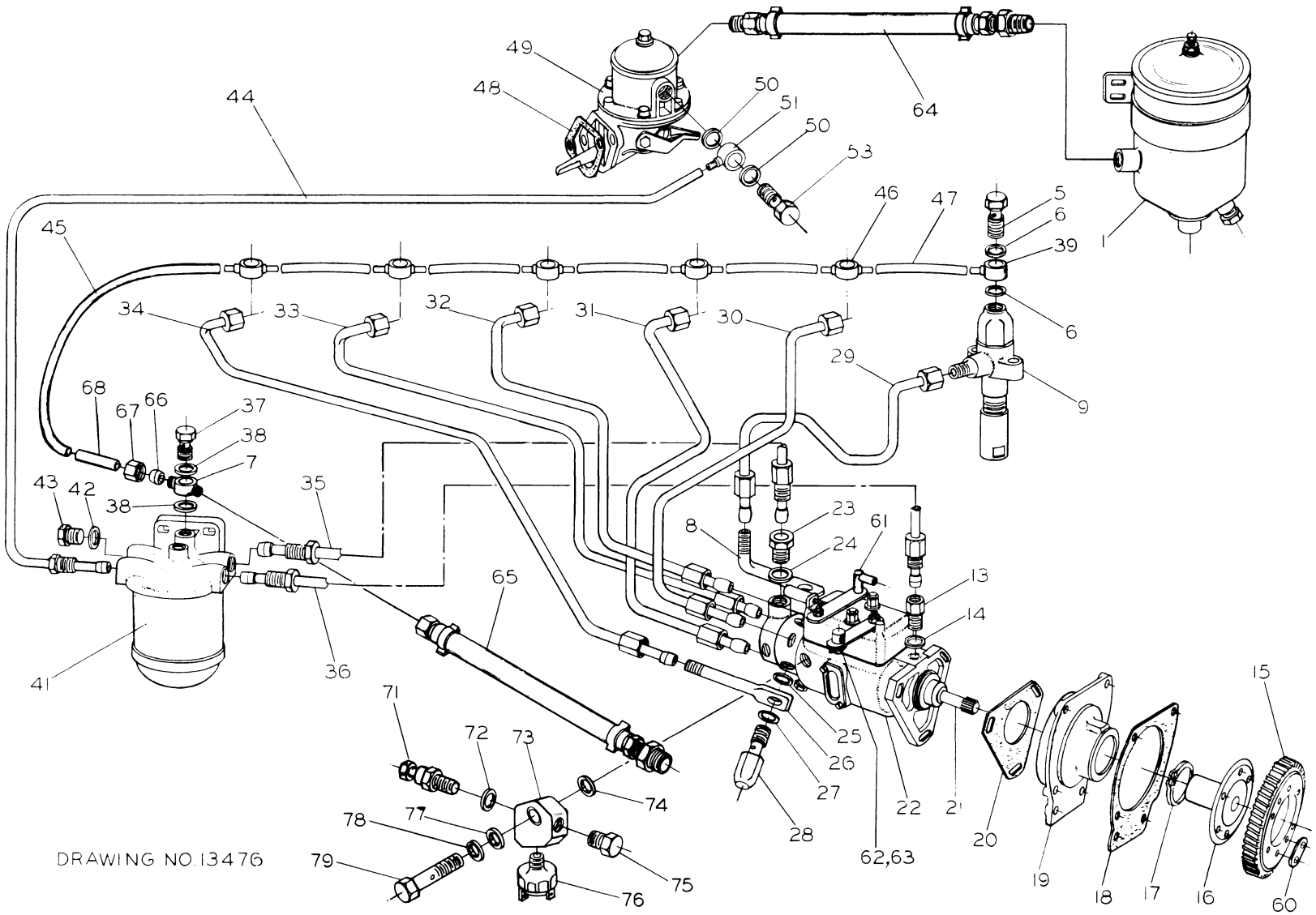

DRAWING NO. 13476

W80 & W120: FUEL SYSTEM

REF	PN	NAME	REMARKS	QUAN
50	17676	WASHER	LIFT PUMP BANJO BOLT	2
51	17646	BANJO	LIFT PUMP	1
53	17649	BOLT	BANJO - LINE - LIFT PUMP TO FILTER	1
54	11920	HOSE	FLEXIBLE	1
60	17930	INDICATOR	TIMING	1
61	19364	CONNECTOR	THROTTLE LEVER CONTROL	1
62	19370	PIVOT	STOP LEVER CONTROL	1
63	11796	PIN	COTTER	1
64	20938	HOSE	FUEL SUPPLY TO LIFT PUMP	1
65	20950	HOSE	FUEL RETURN FROM FUEL FILTER	1
66	13343	FERRULE		1
67	13344	NUT		1
68	11783	TUBING	3/16" OD	1
71	19204	SCREW ASSY	BLEED	1
72	19261	WASHER	COPPER	1
73	19185	ADAPTER		1
74	19321	O-RING	9/16" OD	1
75	11615	PLUG		1
76	11383	SWITCH	FUEL PRESSURE	1
77	19320	O-RING	7/16" OD	1
78	19442	WASHER	FLAT	1
79	19187	SCREW	HEX HEAD	1

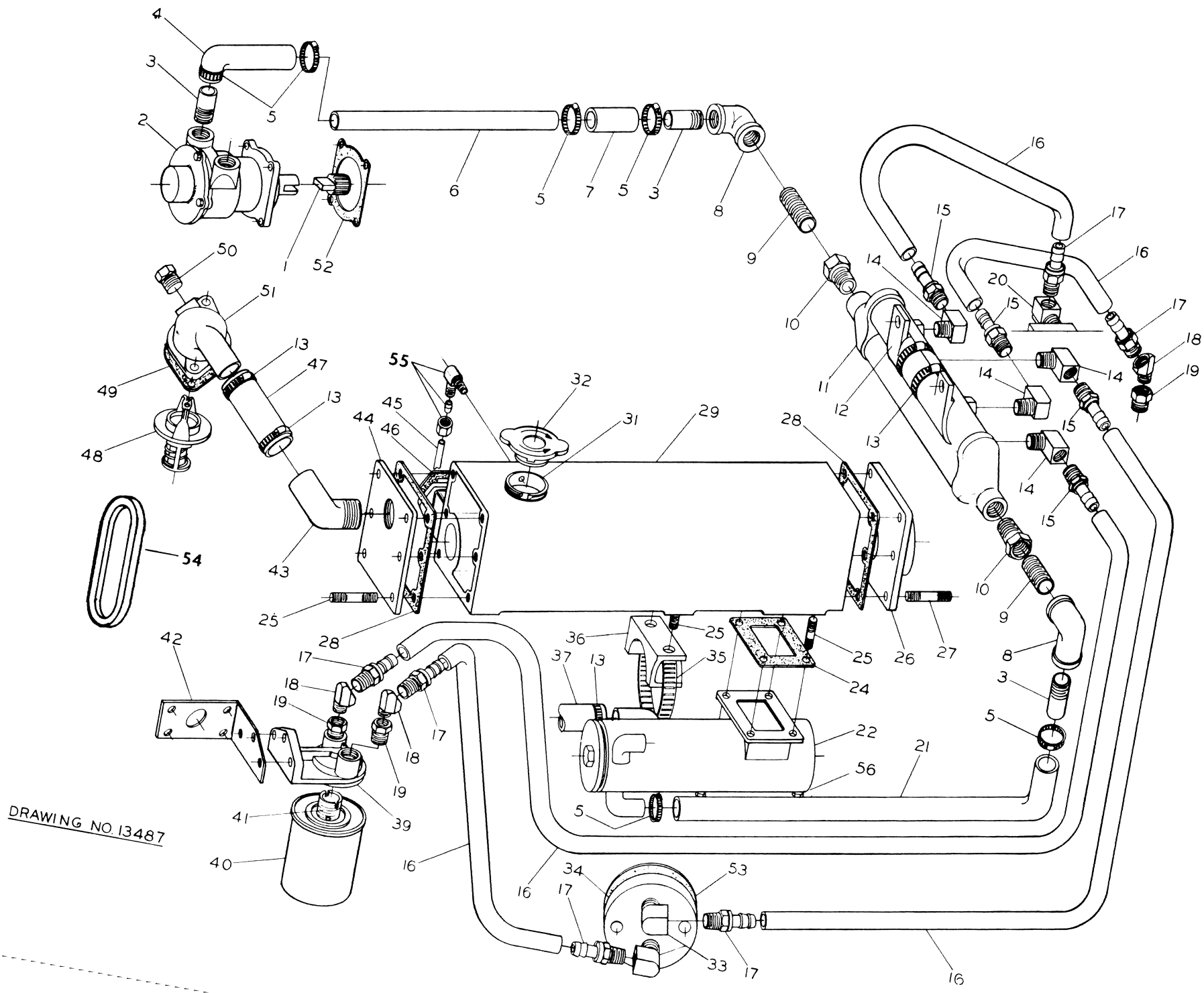

W80 & W120: COOLING SYSTEM

W80 & W120: COOLING SYSTEM

REF	PN	NAME	REMARKS	QUAN
1	13697	DRIVE	SEA WATER PUMP	1
2	16432	PUMP	SEA WATER	1
3	11254	NIPPLE	HOSE	3
4	13671	ELBOW	FORMED HOSE	1
5	11405	CLAMP	HOSE	5
6	11504	TUBING		1
7	13633	HOSE	SEA WATER	1
8	16434	ELBOW		2
9	16374	NIPPLE		2
10	11354	BUSHING		2
11	11193	COOLER	LUBE AND GEAR OIL	1
12	11017	BRACKET	COOLER	1
13	11411	CLAMP	COOLER TO BRACKET	4
14	13338	ELBOW	STREET	4
15	11777	ADAPTER	NO SWIVEL	4
16	11775	LINE	OIL	4
17	11776	ADAPTER	SWIVEL	4
18	13331	ELBOW	45 DEGREE - STREET	1
19	11659	BUSHING		9
20	13330	ELBOW	STREET	1
21	11779	HOSE	SEA WATER	1
22-1	17264	EXCHANGER	W80	1
22-2	16386	EXCHANGER	W120	1
24	16567	GASKET	EXCHANGER TO MANIFOLD	1
25	16415	STUD	EXCHANGER TO MANIFOLD	3
26	16429	FLANGE	EXHAUST	1
27	16466	STUD	EXHAUST FLANGE TO MANIFOLD	1
28	16348	GASKET	EXHAUST FLANGE TO MANIFOLD	1
29-1	16355	MANIFOLD	W80 - EXHAUST	1
29-2	16347	MANIFOLD	W120 - EXHAUST	1
31	11751	NECK	FILLER	1
32	11499	CAP	PRESSURE	1
33	13342	ELBOW	STREET	1
34	16364	ADAPTER	ENGINE LUBE OIL BOSS	1
35	11379	CLAMP	EXCHANGER TO BRACKET	1
36	13712	BRACKET	EXCHANGER TO MANIFOLD	1
37-1	13533	HOSE	W80 - EXCHANGER TO PUMP	1
37-2	13524	HOSE	W120 - EXCHANGER TO PUMP	1
39	16398	ADAPTER	LUBE OIL FILTER	1
40	16655	ELEMENT	LUBE OIL FILTER	1
41	13610	NIPPLE	FILTER ELEMENT TO ADAPTER	1
42	11198	BRACKET	LUBE OIL FILTER ADAPTER	1
43	13474	ELBOW		1
44	16349	PLATE	MANIFOLD FRONT COVER	1
45	11500	TUBING	OVERFLOW	1
46	17615	GASKET	MANIFOLD - 3 ON W80 - 4 ON W120	4
47	11409	HOSE	FRESH WATER	1
48	17926	THERMOSTAT		1
49	17590	GASKET	THERMOSTAT	1

W80 & W120: COOLING SYSTEM
SINCE OCTOBER 1974

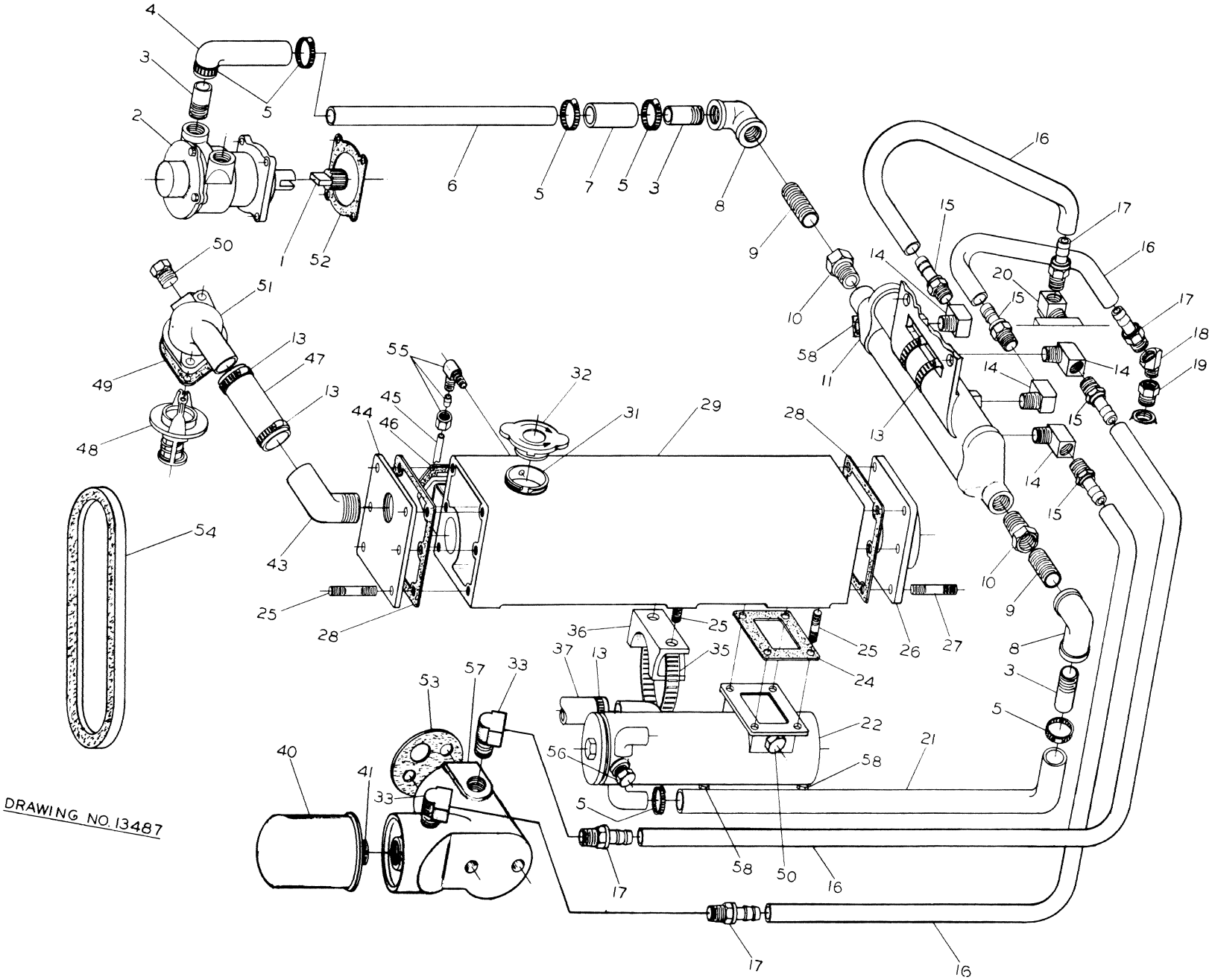

W80 & W120: COOLING SYSTEM

REF	PN	NAME	REMARKS	QUAN
50	11752	PLUG		1
51	16346	HOUSING	THERMOSTAT	1
52-1	17614	GASKET	PUMP TO TIMING COVER	1
52-2	17613	PLATE	TIMING COVER - WHEN PUMP OMITTED	1
53	17764	GASKET	LUBE OIL ADAPTER TO BLOCK	1
54	11195	BELT	FRESH WATER PUMP AND ALTERNATOR	1
55	13329	ELBOW	OVERFLOW LINE	1
56	11885	ZINC	SACRIFICIAL ANODE	1
57	18994	ADAPTER	OIL FILTER TO ENGINE BLOCK	1
58	11471	PETCOCK		3

W80 & W120: BACK END ARRANGEMENT

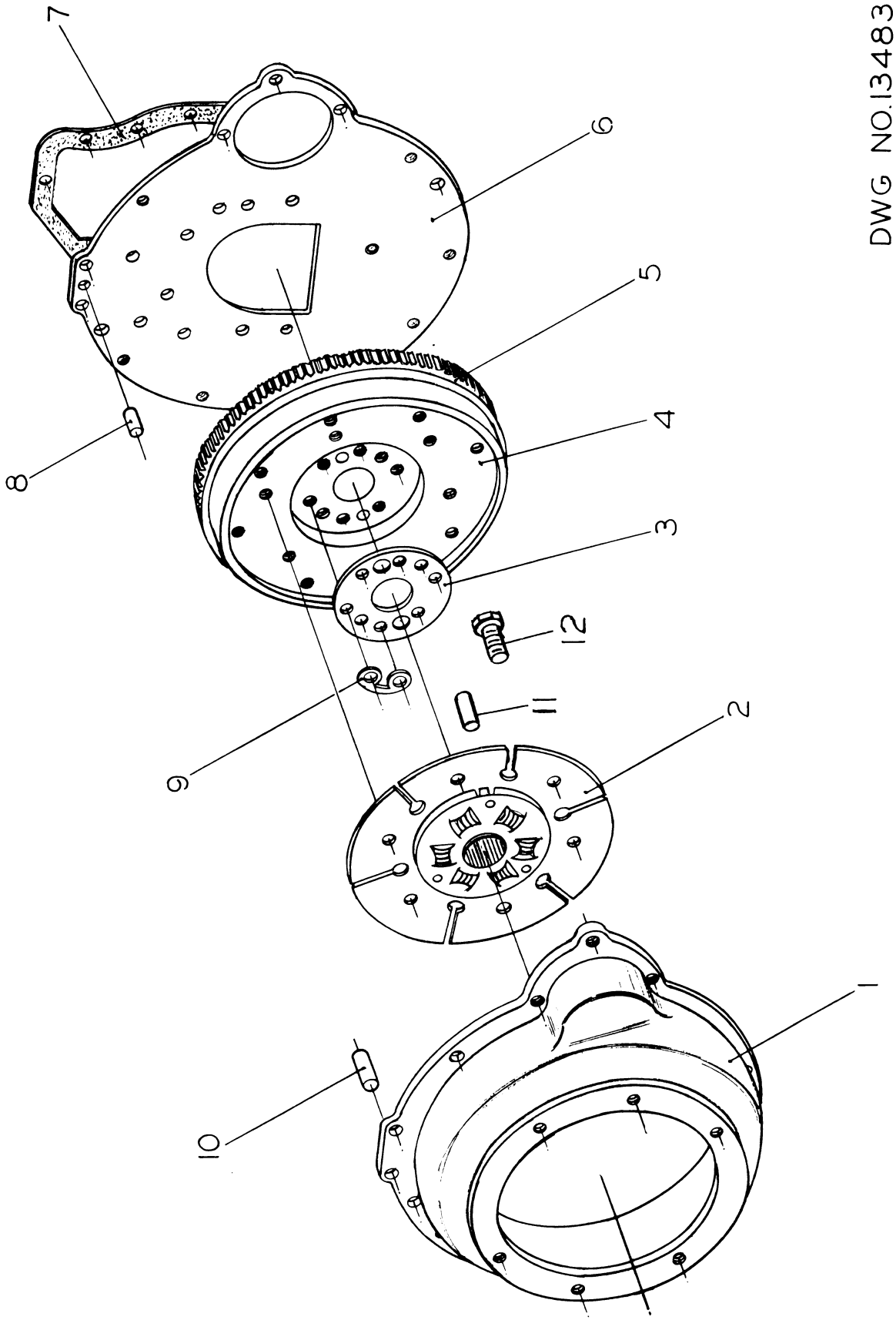

DWG NO.13483

W80 & W120: BACK END ARRANGEMENT

REF	PN	NAME	REMARKS	QUAN
1	17235	HOUSING	HYDRAULIC GEAR	1
2	13602	DAMPER		1
3	17625	PLATE	FLYWHEEL	1
4	16421	FLYWHEEL		1
5	18137	RING GEAR		1
6	16031	BACKPLATE		1
7	19338	GASKET	BACKPLATE TO BLOCK	1
8	17651	DOWEL	BACKPLATE TO BLOCK	4
9	17818	TABWASHER	FLYWHEEL	3
10	13485	DOWEL	HOUSING TO BACKPLATE	2
11	17652	DOWEL	FLYWHEEL TO CRANKSHAFT	2
12	17819	BOLT	FLYWHEEL TO CRANKSHAFT	6

W80 & W120: ELECTRICAL SYSTEM - SINCE SEPTEMBER 1974

WIRING DIAGRAM

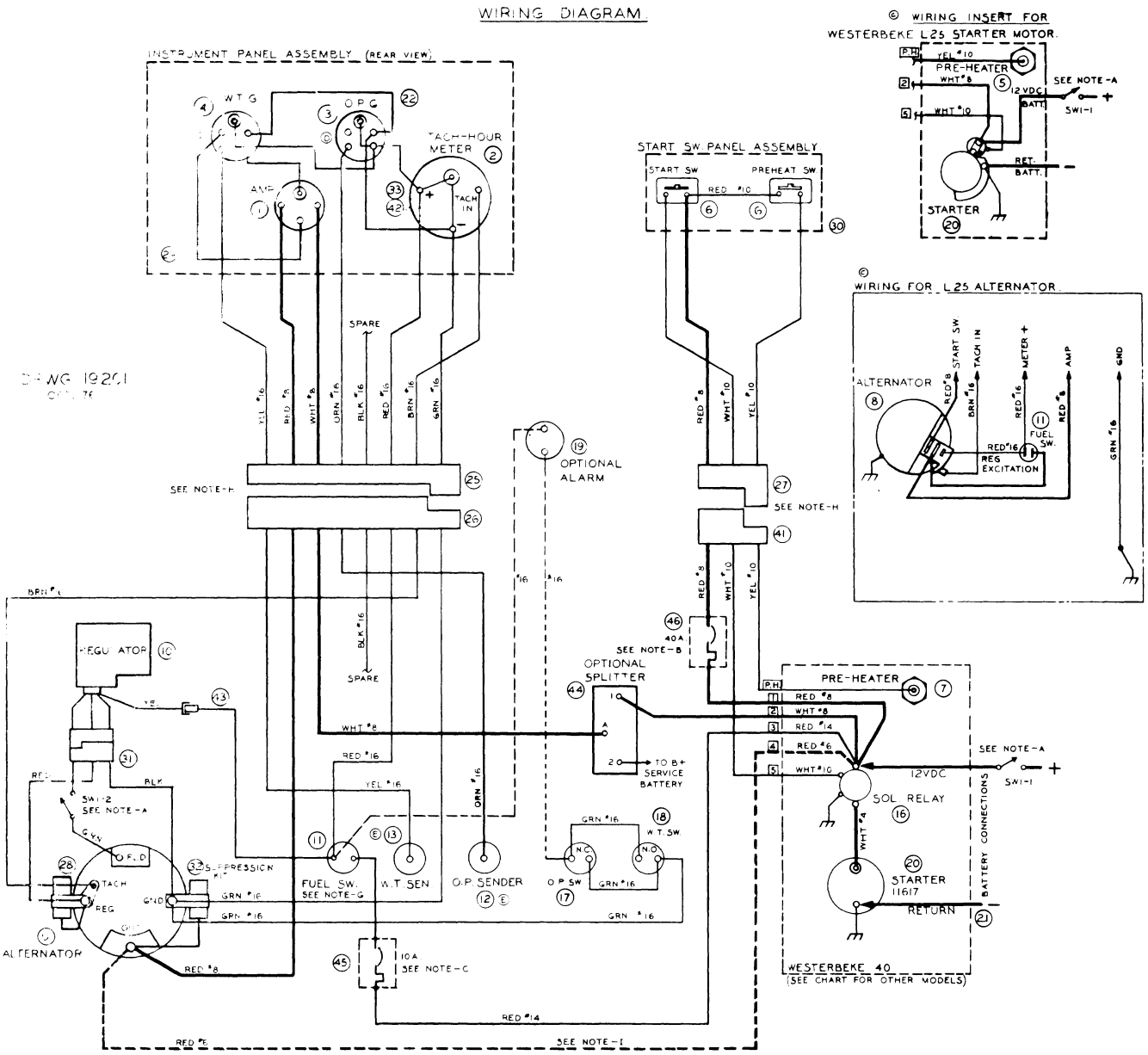

CHART FOR STARTER MOTORS AND HEATERS

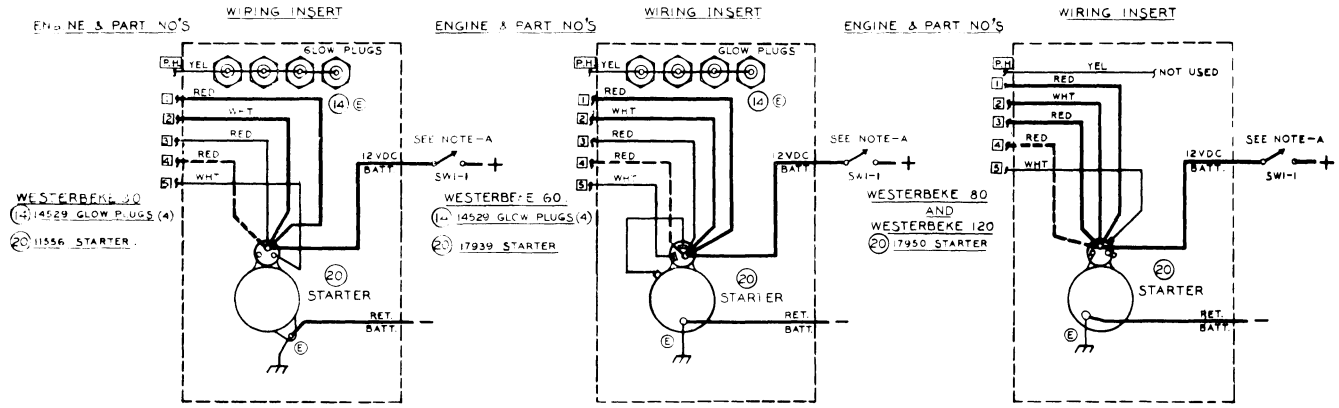

W80 & W120: ELECTRICAL SYSTEM - SINCE SEPTEMBER 1974

REF	PN	NAME	REMARKS	QUAN
1	11581	AMMETER		1
2	11917	TACHOMETER	HOURMETER	1
3	11544	GAUGE	OIL PRESSURE	1
4	11545	GAUGE	WATER TEMPERATURE	1
6	11957	SWITCH	PUSHBUTTON	2
9	19270	ALTERNATOR	NEGATIVE GROUND	1
10	11550	REGULATOR		1
11	11383	SWITCH	FUEL NO	1
12	11542	SENDER	OIL PRESSURE	1
13	11543	SENDER	WATER TEMPERATURE	1
16	11489	SOLENOID	START RELAY	1
17	11552	SWITCH	OIL PRESSURE NC - OPTIONAL	1
18	13382	SWITCH	WATER TEMPERATURE NO - OPTIONAL	1
19	13355	ALARM	OPTIONAL	1
20	17950	MOTOR	STARTER	1
22	19215	PANEL	HARNESS	2
25	19209	CABLE	INSTRUMENT PANEL	1
26	19208	HARNESS	ENGINE INSTRUMENT	1
27	19206	CABLE	STARTING PANEL	1
28	12959	KIT	TACH ALTERNATOR	1
29	12885	PANEL	LESS INSTRUMENTS	1
30	19203	PANEL	START - PREHEAT	1
31	11675	CABLE	ALTERNATOR TO REGULATOR	1
32	11532	KIT	SUPPRESSION ALTERNATOR	1
33	11432	LAMPS		1
41	19205	HARNESS	ENGINE STARTING	1
42	19216	LAMPHOLDER		1
43	11670	WIRE	REGULATOR EXCITATION	1
44	20654	SPLITTER	OPTIONAL	1
45	20946	BREAKER	CIRCUIT 10 AMP	1
46	20947	BREAKER	CIRCUIT 40 AMP	1

W80 & W120: ELECTRICAL SYSTEM

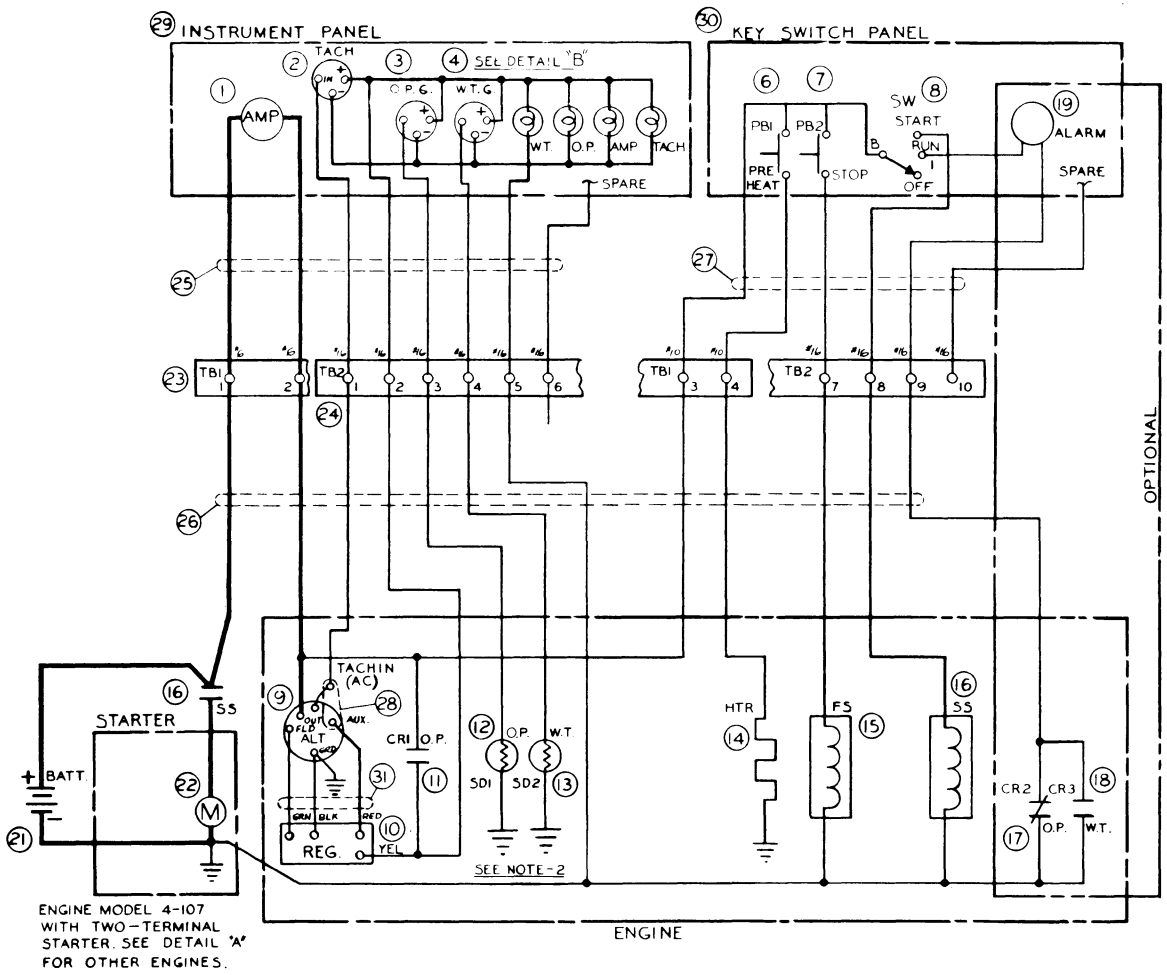

DWG NO. 17309

NEGATIVE GROUND.

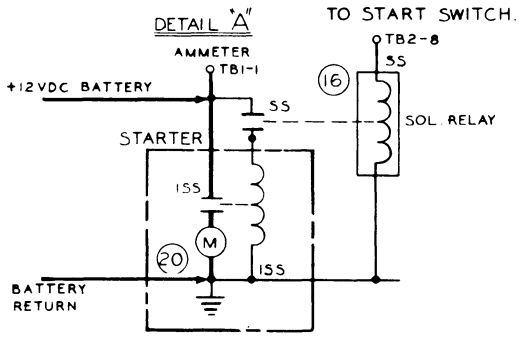

MODEL 4-236, 4-91, 4-231, 4-154, 4-230 & 6-346 TERMINAL STARTER (INTEGRAL ENGAGEMENT SOLENOID)

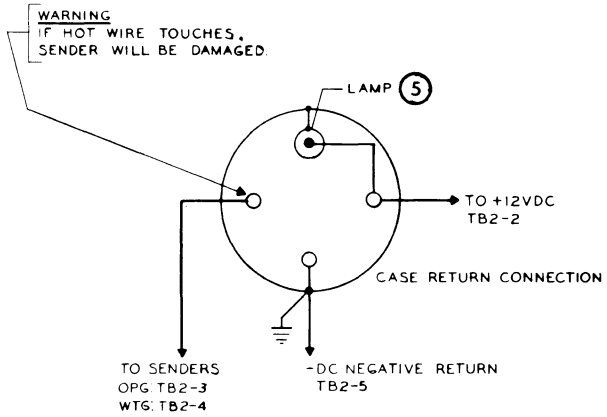

DETAIL "B"

REAR VIEW - TYPICAL FARIA GAGE.

NOTES:

1. THIS DRAWING IS FOR USE ON CONTROL PANELS USING FARIA OIL & WATER GAUGES. USE 12889 FOR PANELS WITH V.D.O. GAUGES.
2. SENDERS (SD1, SD2) ARE 1 WIRE BODY RETURN TYPE.
3. (28) SEE MOTOROLA INSTALLATION INSTRUCTIONS.

W80 & W120: ELECTRICAL SYSTEM

REF	PN	NAME	REMARKS	QUAN
1	16550	AMMETER	ELECTRIC PANEL	1
2-1	11917	TACHOMETER	ELECTRONIC - WITH HOURMETER	1
2-2	12945	O-RING	11917 ELECTRONIC TACHOMETER	1
3	16548	GAUGE	OIL PRESSURE - ELECTRIC PANEL	1
4	16549	GAUGE	WATER TEMPERATURE - ELECTRIC PANEL	1
5	11432	LIGHTBULB	14 VOLT	3
6	11957	SWITCH	PREHEAT	1
7-1	11957	SWITCH	STOP	1
7-2	11958	PLUG	IN LIEU OF STOP PUSHBUTTON	1
8	11956	KEYSWITCH		1
9-1	19270	ALTERNATOR	55 AMP - 12 VOLT - NEGATIVE GROUND	1
9-2	11670	WIRE	ALTERNATOR EXCITATION	1
9-3	11548	PULLEY	ALTERNATOR DRIVING - 55 AMP	1
9-4	16744	BRACKET	ALTERNATOR MOUNTING - 55 AMP	1
9-5	13941	STRAP	ALTERNATOR ADJUSTING - 55 AMP	1
10	11550	REGULATOR	FOR 11546 ALTERNATOR	1
11	11383	SWITCH	OIL PRESSURE - NORMALLY OPEN	1
12	16551	SENDER	OIL PRESSURE - 16548 GAUGE	1
13	16552	SENDER	WATER TEMPERATURE - 16549 GAUGE	1
15	13879	SOLENOID	FUEL	1
16	11489	SOLENOID	START	1
17	11552	SWITCH	OIL PRESSURE - NORMALLY CLOSED	1
18	11396	SWITCH	WATER TEMPERATURE - NORMALLY OPEN	1
19-1	13355	ALARM		1
19-2	13759	PLUG	IN LIEU OF ALARM	1
22-1	17950	MOTOR	STARTER	1
22-2	17957	BRUSH KIT		1
22-3	17947	SPRING	BRUSH	4
22-4	17958	SOLENOID	MOUNTED ON MOTOR	1
23-1	13320	BLOCK	TERMINAL	1
23-2	13855	PLATE	13320 TERMINAL BLOCK SECURING	2
24-1	13319	BLOCK	TERMINAL	1
24-2	13856	PLATE	13319 TERMINAL BLOCK SECURING	2
25	13371	CABLE	ELECTRIC INSTRUMENT PANEL TO ENGINE	1
27	13324	CABLE	KEYSWITCH PANEL TO PRE WIRED ENGINE	1
28	12959	KIT	ALTERNATOR MOD TO ACCEPT ELEC TACH	1
29-1	12317	PANEL	ALL ELECTRIC MARINE	1
29-2	13353	PANEL	ALL ELECTRIC MARINE - PRE WIRED	1
29-3	13777	HARNESS	FOR 13353 PRE WIRED ELECTRIC PANEL	1
30	13515	NAMEPLATE	KEYSWITCH PANEL	1
31	11549	HARNESS	FOR 11550 REGULATOR	1

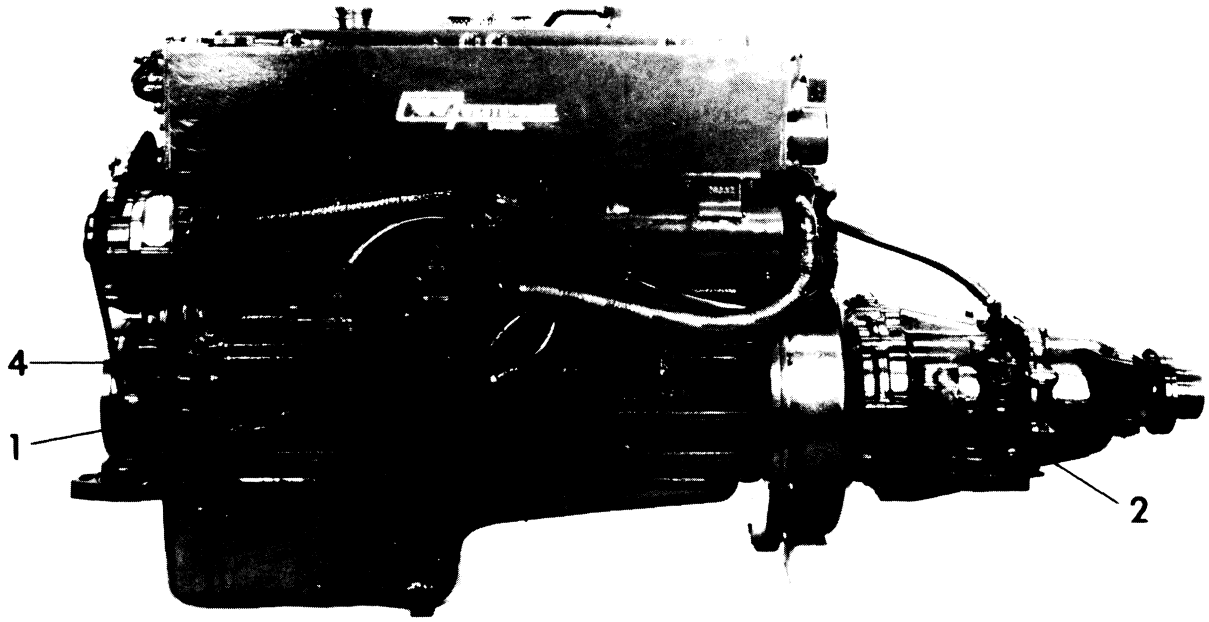
4
1
2

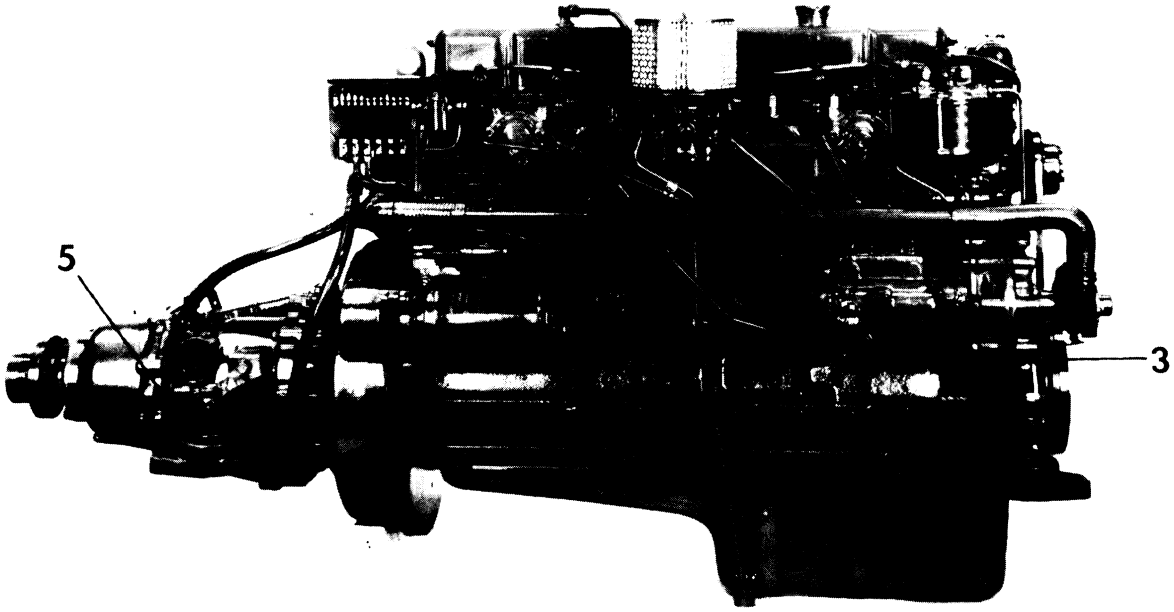
5
3

W80 & W120: MOUNTING SYSTEM

REF	PN	NAME	REMARKS	QUAN
1	16345	MOUNT	STANDARD - FRONT RIGHT AND LEFT	2
2	13055	MOUNT	STANDARD - REAR RIGHT AND LEFT	2
3	16342	ADAPTER	FRONT RIGHT MOUNT TO ENGINE	1
4	16343	ADAPTER	FRONT LEFT MOUNT TO ENGINE	1
5	11782	ISOLATOR		4

W60 (FROM APRIL 1974) W80 & W120: SEA WATER PUMP

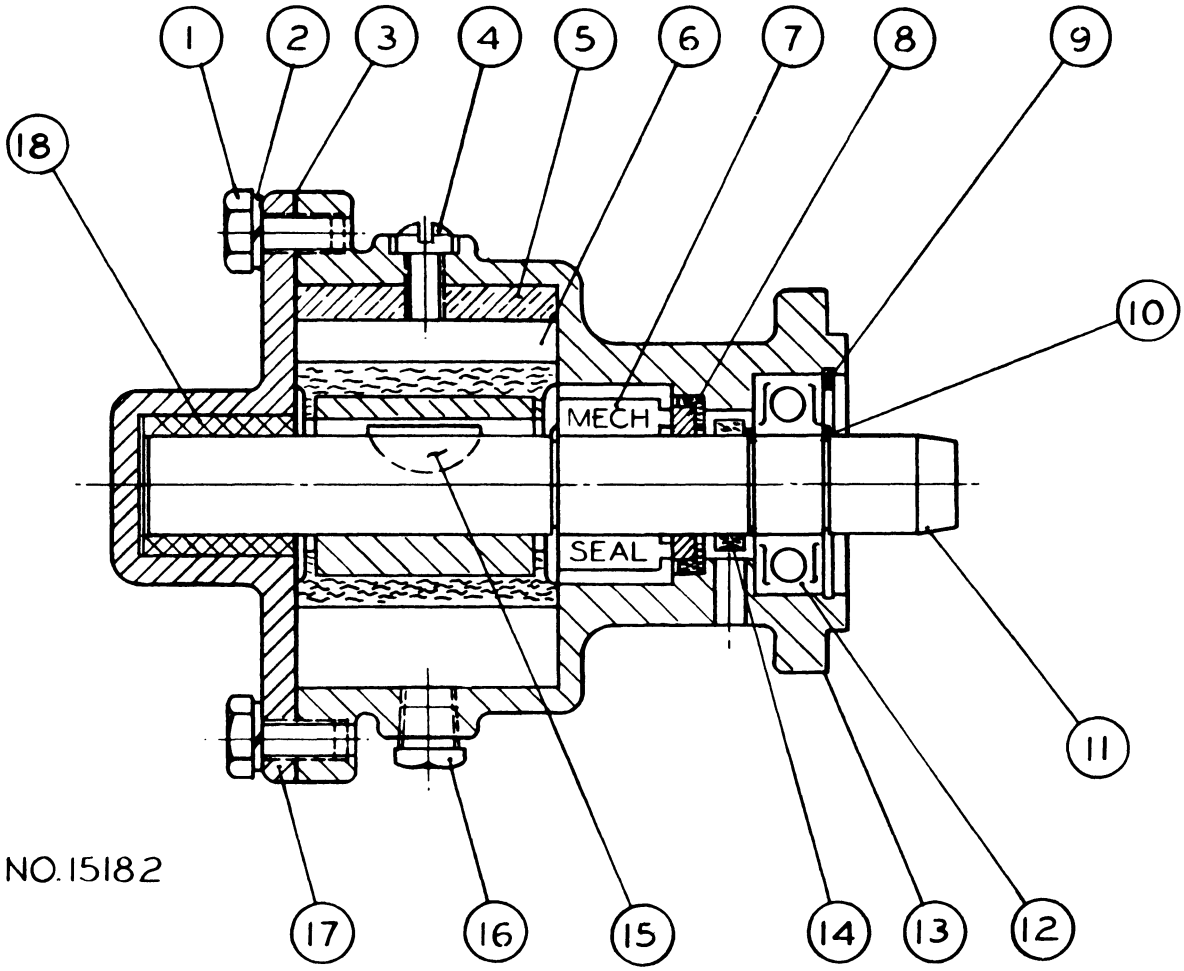

DWG NO.15182

W60 (FROM APRIL 1974) W80 & W120: SEA WATER PUMP

REF	PN	NAME	REMARKS	QUAN
1	18143	SCREW	COVER TO PUMP HOUSING	4
2	18142	PIN	COVER TO PUMP HOUSING	2
3	13954	GASKET	COVER TO PUMP HOUSING	1
4	18160	SCREW	PUMP HOUSING TO CAM	1
5	18166	CAM		1
6	13930	IMPELLER		1
7	12923	SEAL	PRIMARY	1
8	12922	SEAT	PRIMARY SEAL	1
9	18146	SNAPRING	OUTBOARD BEARING	1
10	18145	SNAPRING	INBOARD BEARING	3
11	18174	SHAFT		1
12	18144	BEARING		1
13-1	18173	HOUSING	PUMP	1
13-2	16432	PUMP	COMPLETE	1
13-3	15131	KIT	MAJOR REPAIR	1
14	18150	SLINGER		1
15	18148	KEY	IMPELLER TO SHAFT	1
16	18139	DRAINPLUG		1
17	18155	COVER		1
18	18149	BUSHING	SHAFT END	1
19	12290	COLLAR	SHAFT SUPPORT	1

W80 & W120: MISCELLANEOUS

REF	PN	NAME	REMARKS	QUAN
1	17919	GASKET SET	W120 - UPPER	1
2	17917	GASKET SET	W120 - SUPPLEMENTARY	1
3	17918	GASKET SET	W80 - UPPER	1
4	17916	GASKET SET	W80 - SUPPLEMENTARY	1
5	13826	TUBING	SUMP PUMP TO DIPSTICK TUBE	3
6	11592	PUMP	SUMP	1
7	15167	KIT	MINOR	AR

N O T E S

30 & 45KW: GENERATOR

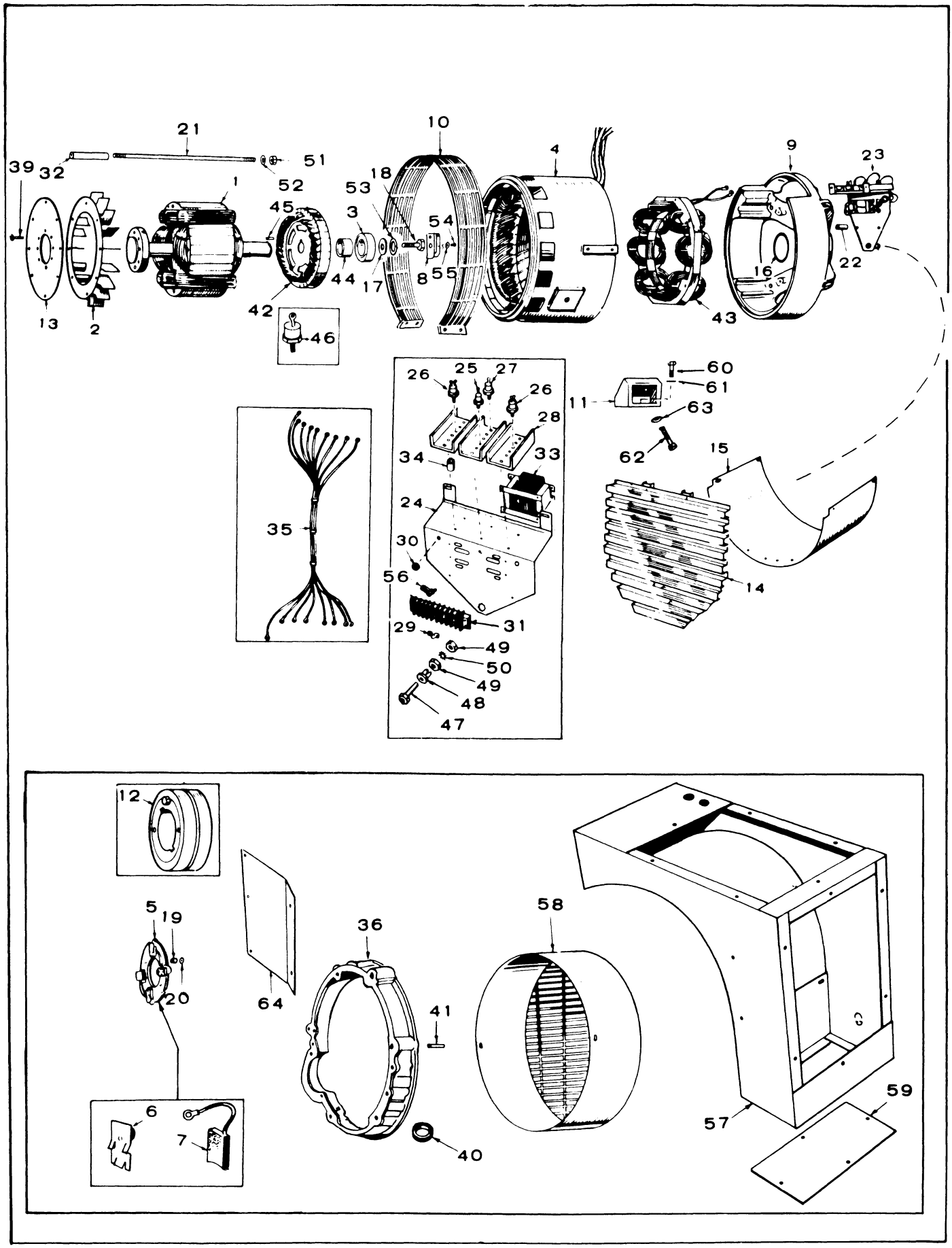

30 & 45KW: GENERATOR

REF	PN	NAME	REMARKS	QUAN
2	18284	BLOWER		1
3	18321	BEARING		1
4-1	18330	STATOR ASSY	WOUND - 30KW	1
4-2	18331	STATOR ASSY	WOUND - 45KW	1
8	11790	ASSY	SWITCH - OVERSPEED	1
9	18285	BELL	END	1
10	18290	SCREEN	GENERATOR	1
11	15249	BRACKET	GENERATOR MOUNTING	2
13	18287	DISC	GENERATOR DRIVE	1
14	18291	GRILLE	GENERATOR AIR INLET - UNHOUSED	1
15	18289	WRAPPER	GENERATOR END BELL - UNHOUSED	1
16	18320	SEAL	O-RING - BEARING	1
17	18325	WASHER	BEARING RETAINER	1
21	18324	STUD	GENERATOR THROUGH	4
22	18295	SPACER	VOLTAGE REGULATOR	2
23	18297	ASSY	CHASSIS	1
24	18296	CHASSIS	VOLTAGE REGULATOR	1
25	18312	RECTIFIER	SILICONE - AVALANCHE - NEGATIVE	1
26	18315	RECTIFIER	GATE CONTROL - NEGATIVE	2
27	18313	RECTIFIER	SILICON - AVALANCHE - NEGATIVE	1
28	18314	HEAT SINK	RECTIFIER	3
29	18301	JUMPER	TERMINAL BOARD	2
30	18319	GROMMET	REACTOR LEADS	2
31	18304	BLOCK	TERMINAL	1
32	18317	HOSE	INSULATOR	4
33	18299	ASSY	REACTOR	1
34	18303	INSULATOR	HEAT SINK MTG	6
35	18307	ASSY	HARNESS - VOLTAGE REGULATOR	1
41	18323	PIN	GENERATOR ADAPTER ALIGNMENT	1
42	18283	ASSY	ROTOR - WOUND - EXCITER - BRUSHLESS	1
43	18286	ASSY	STATOR - WOUND - EXCITER - BRUSHLESS	1
44	18288	SPACER	BEARING - BRUSHLESS	1
45	18322	KEY	EXCITER ROTOR - BRUSHLESS	1
46-1	18310	RECTIFIER	DIODE - NEGATIVE - BRUSHLESS	3
46-2	18311	RECTIFIER	DIODE - POSITIVE - BRUSHLESS	3
47	18282	ASSY	CONTACT - OVERSPEED SWITCH	1
56	18306	CLAMP	CABLE	1

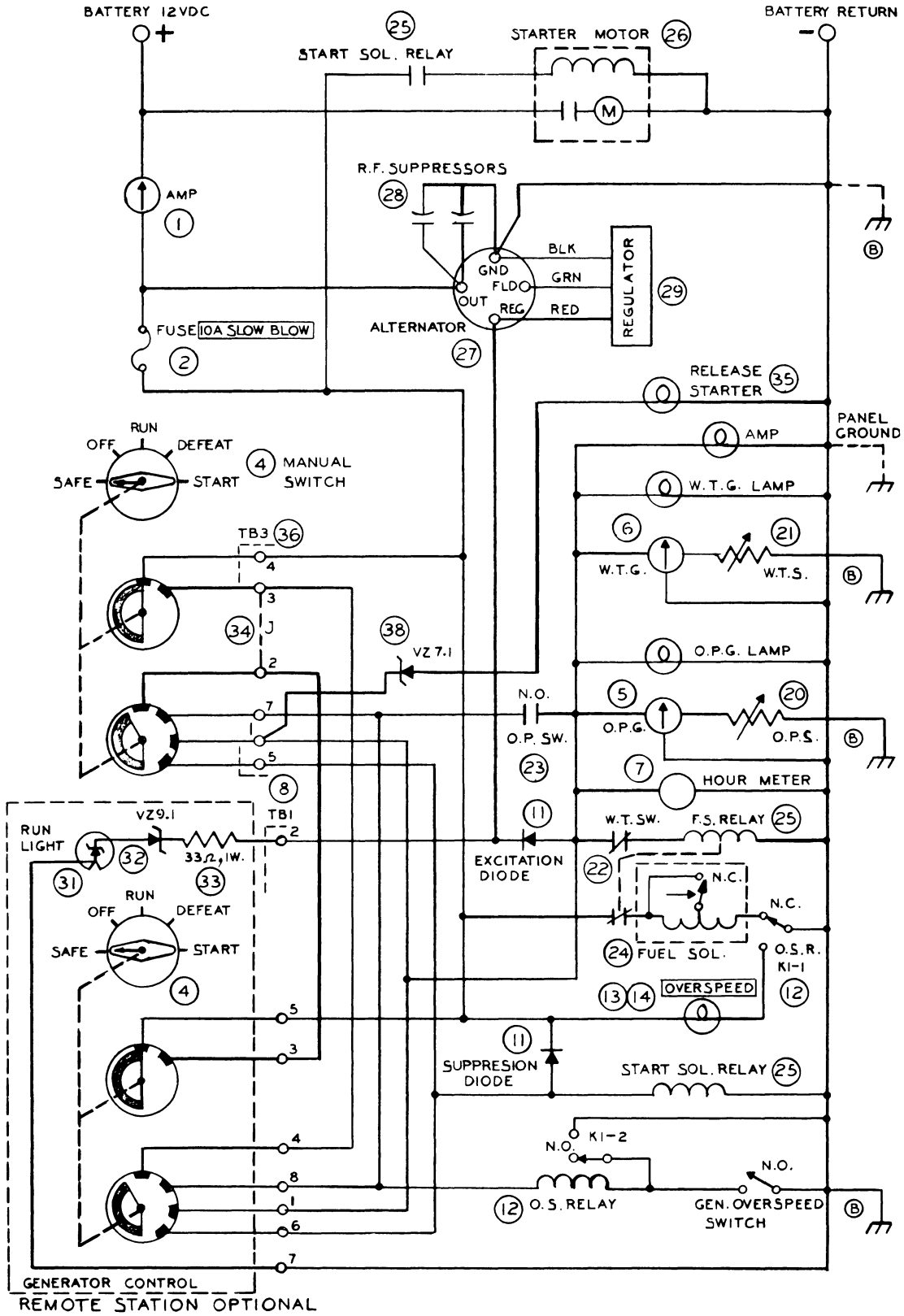

FUNCTIONAL SCHEMATIC DIAGRAM.

REF	PN	NAME	REMARKS	QUAN
1	11581	AMMETER		1
2	11464	FUSE	10A SLOW BLOW	1
3	11454	FUSEHOLDER		1
4	13722	SWITCH	ROTARY - OPTIONAL	1
5	11544	GAUGE	OIL PRESSURE	1
6	11545	GAUGE	WATER TEMPERATURE	1
7	12892	HOURMETER		1
8	15220	BLOCK	12 TERMINAL	1
9	15221	MARKER	12 TERMINAL	1
10	22020	HARNESS	PANEL	1
11	11460	DIODE		2
12	11582	RELAY	DPDT OVERSPEED	1
13	11429	LAMPHOLDER		1
14	11432	LAMP		1
15	12975	BLOCK	2 TERMINAL	1
16	13364	MARKER	2 TERMINAL	1
17	15546	BLOCK	3 TERMINAL SECTIONS	3
18	13447	BLOCK	4 TERMINAL - OPTIONAL	1
19	15067	MARKER	4 TERMINAL - OPTIONAL	1
20	11542	SENDER	OIL PRESSURE	1
21	11543	SENDER	WATER TEMPERATURE	1
22	12884	SWITCH	WATER TEMPERATURE (NC)	1
23	11383	SWITCH	OIL PRESSURE (NO)	1
24	15190	SOLENOID	FUEL	1
25	22129	RELAY	SLAVE	2
26	17950	MOTOR	STARTER	1
27	11546	ALTERNATOR	55 AMP	1
28	11532	KIT	SUPPRESSION	1
29	11550	REGULATOR		1
30	11675	CABLE	ALTERNATOR TO REGULATOR	1
31	13725	LED	RUNLIGHT - OPTIONAL	1
32	13724	DIODE	ZENER 9,1 VZ - OPTIONAL	1
33	13723	RESISTOR	COMPOSITION 1W - OPTIONAL	1
34	15223	JUMPER	BLOCK	1
35	15678	LAMP	RELEASE STARTER	1
36	22025	BLOCK	10 TERMINAL	1
37	22026	MARKER	10 TERMINAL	1
38	22024	DIODE	ZENER 7,1 VZ	1
39	15547	BLOCK	END	1
40	15536	HARNESS	ENGINE - 45KW	1
41	13488	HARNESS	ENGINE - 30KW	1
42	22021	HARNESS		1
43	13728	PANEL	REMOTE - COMPLETE - OPTIONAL	1
44	22264	PANEL	WITH ENCLOSURE ASSEMBLY	1

30 & 45KW: ENGINE CONTROL SYSTEM

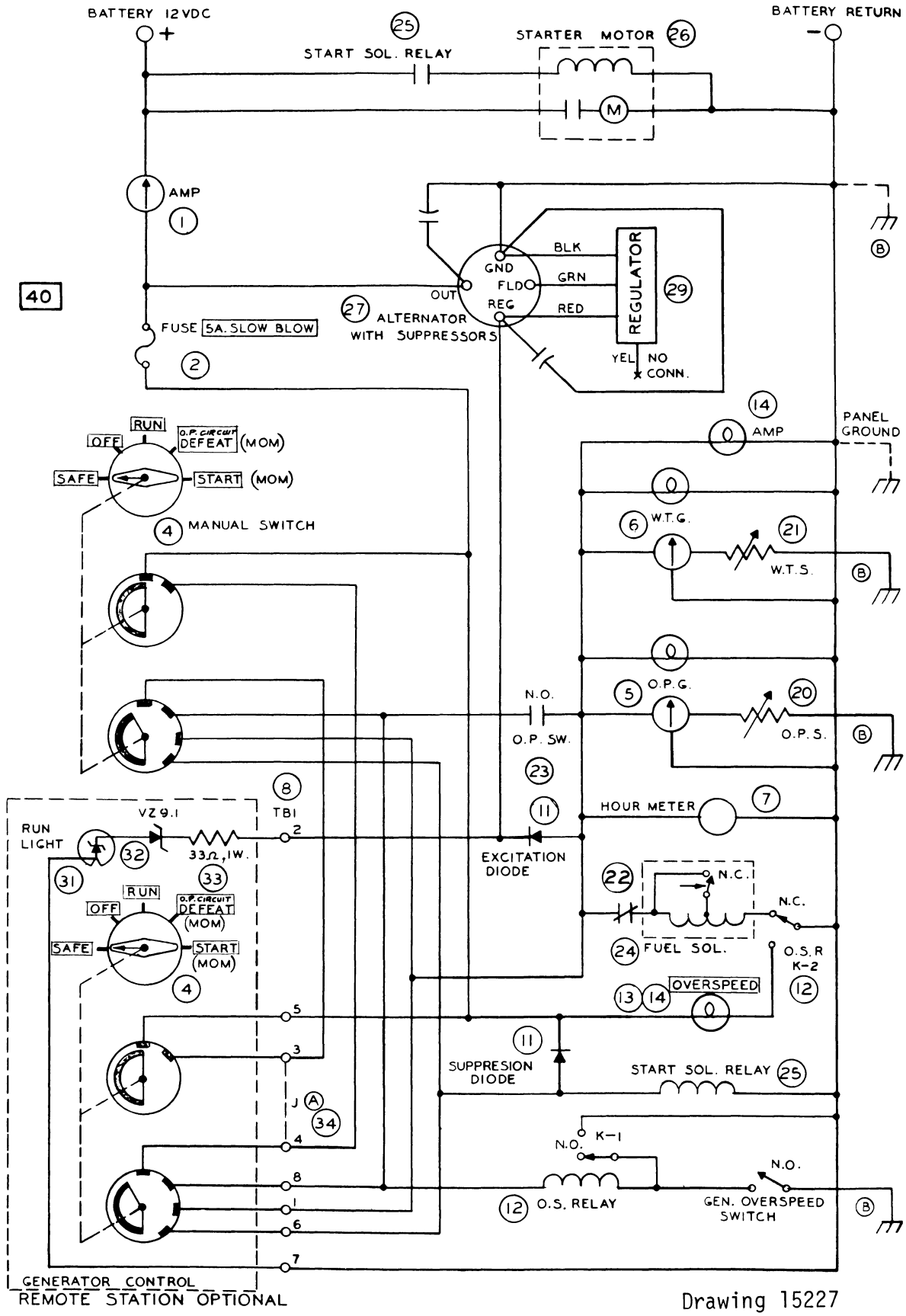

Drawing 15227

30 & 45KW: ENGINE CONTROL SYSTEM

REF	PN	NAME	REMARKS	QUAN
1	16550	AMMETER		1
2	11464	FUSE	10A SLOW BLOW	1
3	11454	FUSEHOLDER		1
4	13722	SWITCH	ROTARY	2
5	16548	GAUGE	OIL PRESSURE	1
6	16549	GAUGE	WATER TEMPERATURE	1
7	12892	HOURMETER		1
8	15220	BLOCK	12 TERMINAL	1
9	15221	MARKER	TERMINAL	1
10	13916	HARNESS	PANEL	1
11	11460	DIODE		2
12	11582	RELAY	DPDT - OVERSPEED	1
13	11429	LAMPHOLDER		1
14	11432	LAMP		4
17	11816	BLOCK	3 TERMINAL AC	1
18	13447	BLOCK	4 TERMINAL	1
19	15067	MARKER	TERMINAL	1
20	16551	SENDER	OIL PRESSURE	1
21	16552	SENDER	WATER TEMPERATURE	1
22	12884	SWITCH	WATER TEMPERATURE (NC)	1
23	11383	SWITCH	OIL PRESSURE (NO)	1
24	15190	SOLENOID	FUEL	1
25	11489	RELAY	STARTER SOLENOID	1
26	11488	MOTOR	STARTER	1
27	11546	ALTERNATOR	55 AMP	1
28	11532	KIT	SUPPRESSION	1
29	11550	REGULATOR		1
30	11675	CABLE	ALTERNATOR	1
31	13725	LAMP	RUN LIGHT	1
32	13724	DIODE	ZENER	1
33	13723	RESISTOR	COMPOSITION - 1W	1
34	15223	JUMPER	BLOCK	1
100	15535	ASSEMBLY	PANEL & ENCLOSURE - COMPLETE	1
102	13728	PANEL	REMOTE - COMPLETE	1
103-1	15536	HARNESS	ENGINE - 45KW	1
103-2	13488	HARNESS	ENGINE - 30KW	1
105	15137	CABLE	REMOTE - 20 FT STANDARD LENGTH	1

30 & 45KW: VOLTAGE REGULATOR & POWER CONNECTIONS

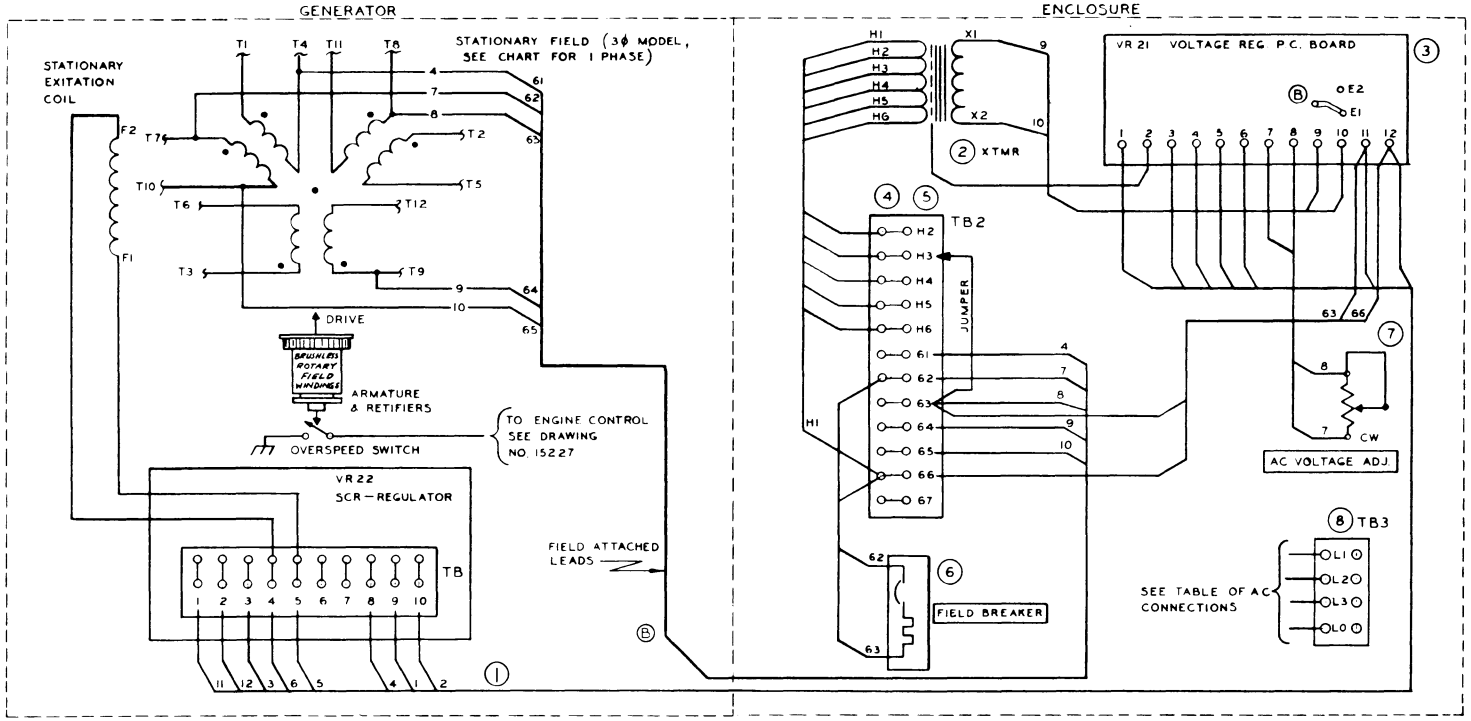

TABLE OF AC CONNECTIONS (A)

		GENERATOR MODEL	FREQ HZ	POWER KW	VOLTS RMS	MAX. BAL. KVA-.8PF	LIMIT OF LINE AMP	JUMPER CONNECT'N
ONE PHASE FIXED CONNECTION	SPLIT PHASE	30.0UR-3N/1B	60	30.0	120/240	37.5	156.0	H5
			50	25.0	115/230	31.2	135.0	H6
		45.0 UR 3N/1B	60	45.0	120/240	56.2	234.0	H5
			50	37.5	115/230	46.8	203.0	H6
THREE PHASE RECONNECTABLE	SERIES DELTA	30.0 UR 215N/1B	60	30.0	240	37.5	52.0	H5
			50	25.0	230	31.2	45.0	H6
		45.0UR 215N/1B	60	45.0	240	56.2	78.0	H5
			50	37.5	230	46.8	68.0	H6
	PARALLEL WYE	30.0UR 215N/1B	60	30.0	120/208	37.5	104.0	H3
				30.0	127/220	37.5	98.5	H4
				30.0	139/240	37.5	90.0	H5
			50	25.0	110/190	31.2	95.0	H3
				25.0	115/208	31.2	90.0	H4
		45.0UR 215N/1B	60	45.0	120/208	56.2	156.0	H3
				45.0	127/220	56.2	148.0	H4
				45.0	139/240	56.2	135.0	H5
			50	37.5	110/190	37.5	143.0	H3
				37.5	115/200	37.5	118.0	H4
	SERIES WYE	30.0UR 215N/1B	60	30.0	240/416	37.5	52.0	H3
				30.0	254/440	37.5	49.0	H4
				30.0	277/480	37.5	45.0	H5
			50	25.0	220/380	31.2	47.5	H3
				25.0	237/400	31.2	45.0	H4
		45.0UR 215N/1B	60	45.0	240/416	56.2	78.0	H3
				45.0	254/440	56.2	74.0	H4
				45.0	277/480	56.2	68.0	H5
			50	37.5	220/380	37.5	72.0	H3
				37.5	234/400	37.5	68.0	H4

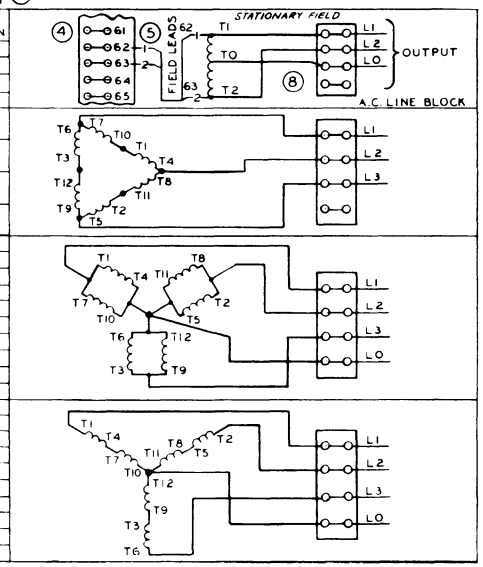

Drawing 15555

30 & 45KW: VOLTAGE REGULATOR & POWER CONNECTIONS

REF	PN	NAME	REMARKS	QUAN
1	18307	HARNESS		1
2	18298	TRANSFORMER		1
3	18305	BOARD	VOLTAGE REGULATOR	1
4	15220	BLOCK	12 TERMINAL	1
5	18302	STRIP	MARKER	1
6	18300	BREAKER		1
7	18294	RHEOSTAT		1
8-1	15546	TERMINAL	SINGLE SECTION	4
8-2	15547	END SECTION	TERMINAL	1
8-3	15548	CHANNEL	TERMINAL MOUNTING	1
8-4	15549	CLAMP	TERMINAL SECTION	2

30 & 45KW: MISCELLANEOUS PARTS

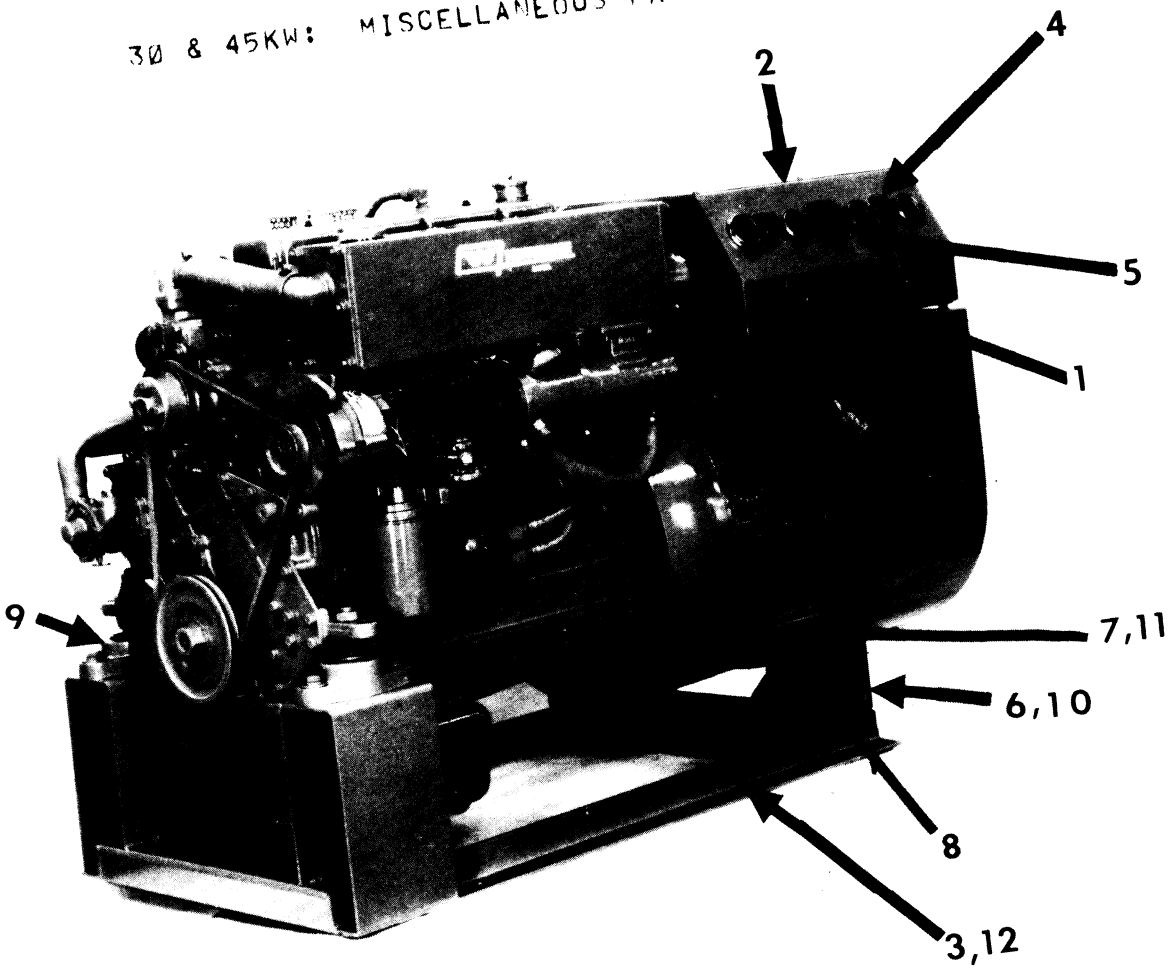

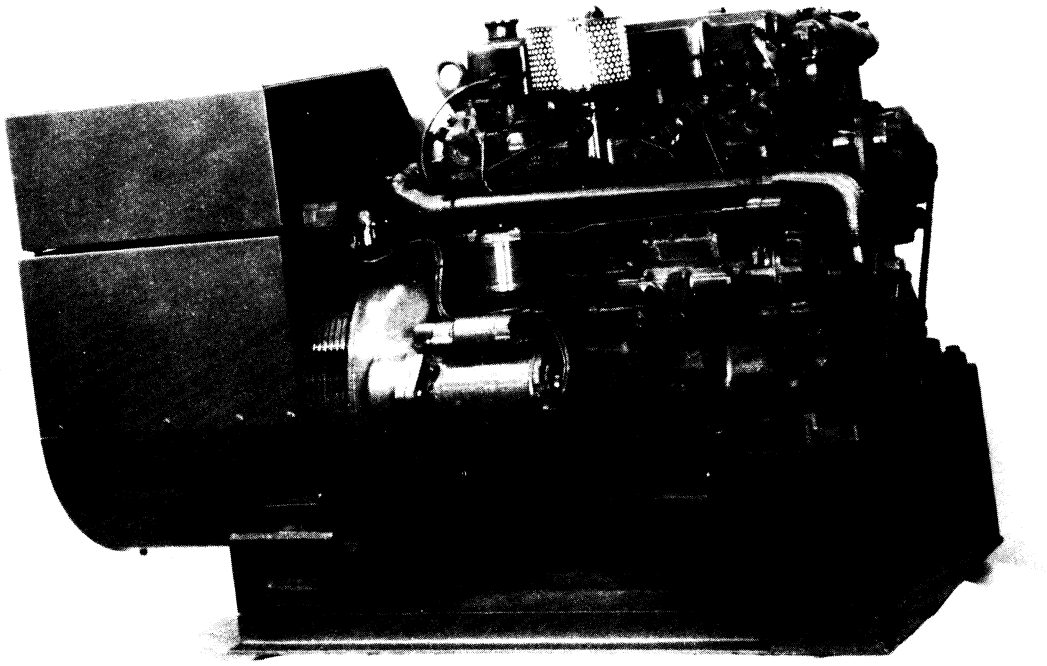

30 & 45KW: MISCELLANEOUS PARTS

REF	PN	NAME	REMARKS	QUAN
1	13653	NAMEPLATE		1
2	15100	NAMEPLATE		1
3	15143	BASE		1
4	15145	NAMEPLATE		1
5	15219	PANEL		1
6	15249	MOUNTS		2
7	15250	ISOLATORS		2
8	15251	BOLTS		2
9	16345	MOUNT	FRONT RIGHT & LEFT - OPTIONAL	2
10	21986	MOUNT	REAR RIGHT & LEFT - OPTIONAL	2
11	24743	ISOLATOR	FRONT & REAR - OPTIONAL	6
12	24952	BASE	ENGINE & GENERATOR SUPPORT - 30 KW - OPTION	1